GERMAN BATTLESHIP

Bismarck

1

AMATI

— est. 1879 —

INDEX

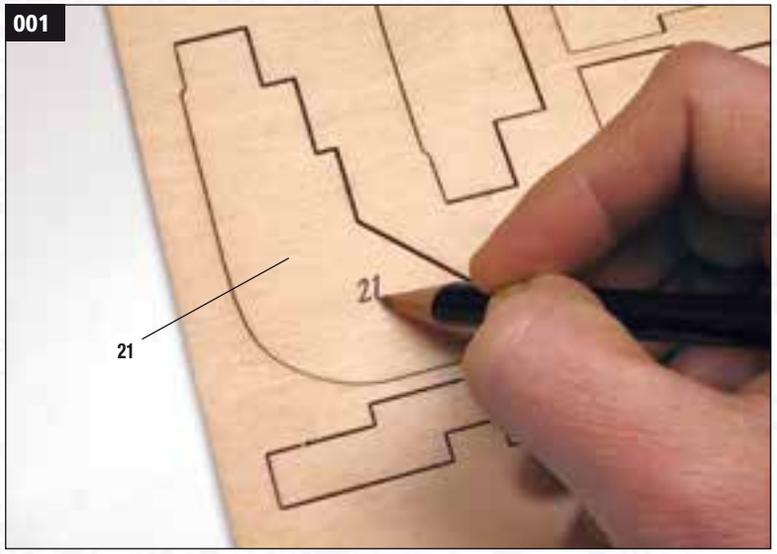

001 Take laser sheet 3550 and write in pencil the number of the individual parts of the frame shown on technical table 01.

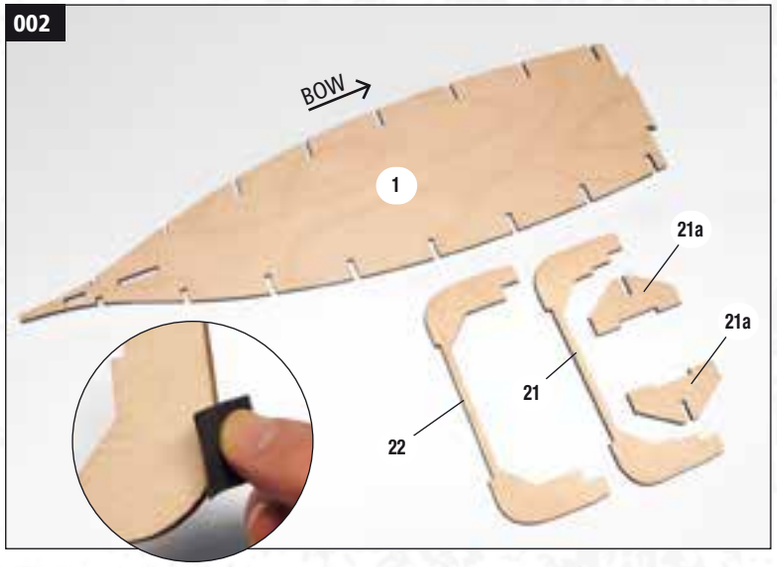

002 Using a knife or sandpaper, remove any attachment material from where the pieces were connected to the parts sheet. Remove keel 1, bulkheads 21, 22 and supports 21a (x2); with fine-grit sandpaper, smooth any imperfection and notches and lay them on your worktop.

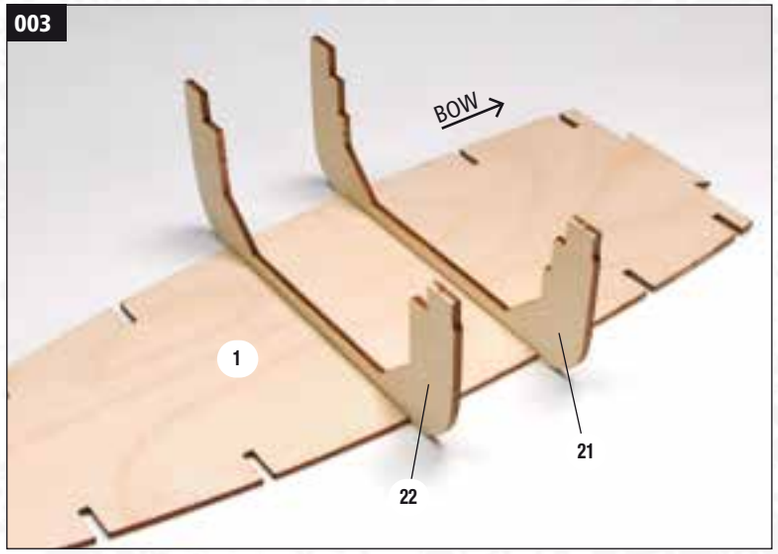

003 Take the two bulkheads 21 and 22 and try to position them (without gluing them) in the joints of keel 1, oriented as shown in the picture above. Warning: the two bulkheads must be perpendicular to the keel. Apply a layer of wood glue inside the lower joint of the bulkheads, then insert them and glue them in their seats.

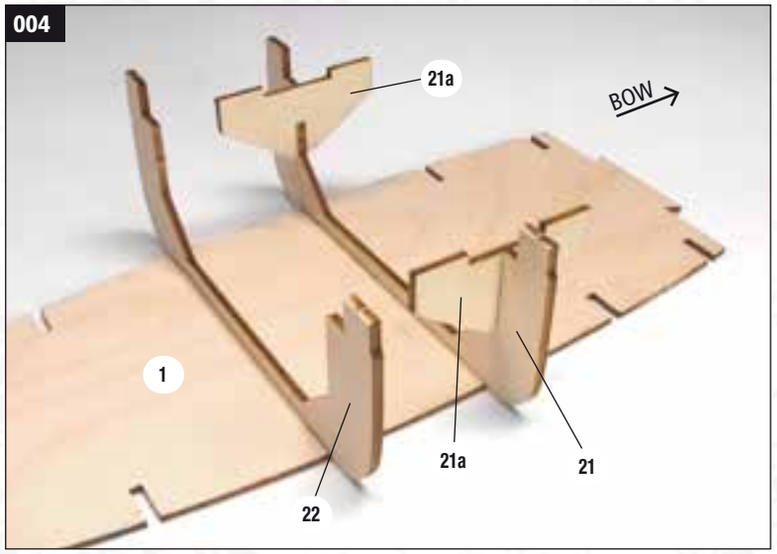

004 Take the two supports 21a. Distribute a layer of wood glue in the joint and fix them inside bulkhead 21, as shown in the picture above.

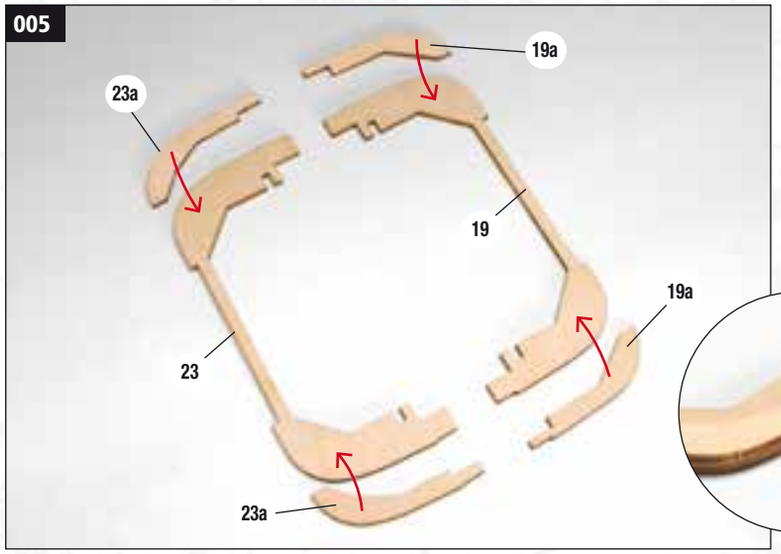

005 Remove from sheets 3551 and 3550 the two bulkheads 19 and 23 with the respective supports, 19a (x2) and 23a (x2), smooth any imperfection on the pieces with sandpaper and lay them on your worktop. The four supports 19a and 23a must be glued aligned to the external profile of bulkheads 19 and 23 (red arrows).

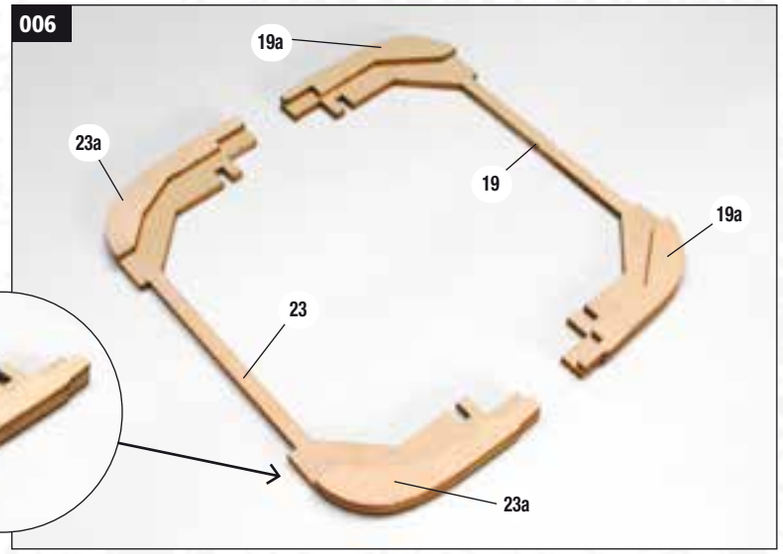

006 Perform tests without glue; then, glue the supports to the bulkheads.

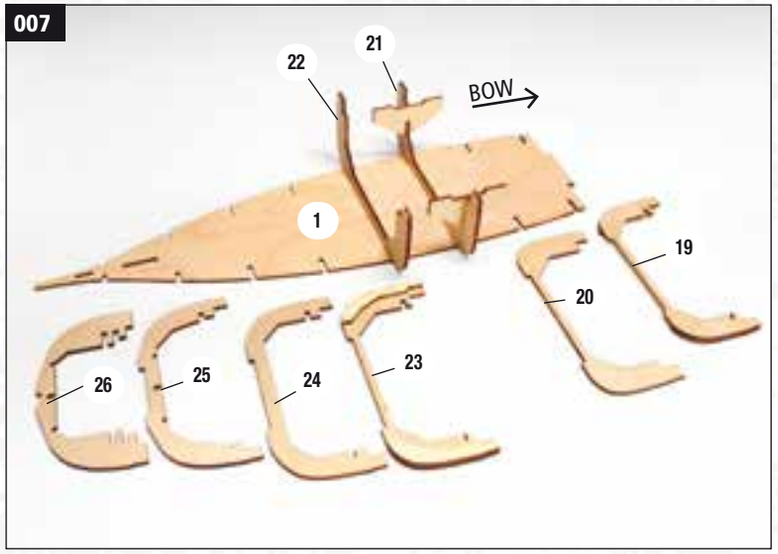

007 Remove from laser sheets 3550 and 3551 bulkheads 20, 24, 25, 26 and lay them on your worktop together with bulkheads 19 and 23, which you have prepared in the previous steps.

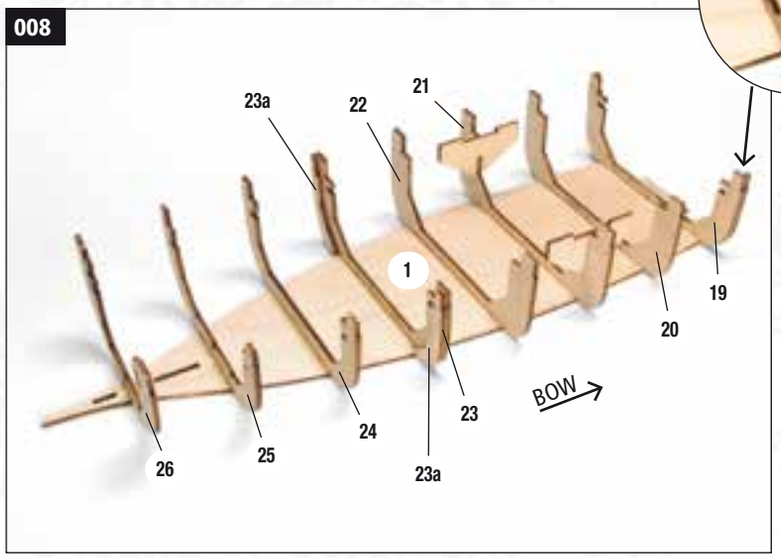

008 While performing tests without glue, insert the bulkheads in the respective joints on keel 1. Check that they are perpendicular to the keel and parallel to each other; then glue. Warning! Supports 19a of bulkhead 19 must point towards the bow (see detail), while supports 23a of bulkhead 23 must point towards the stern.

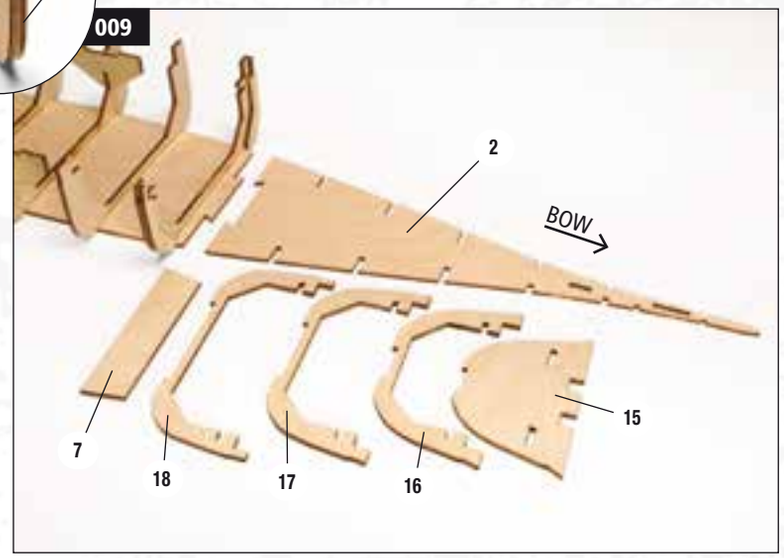

009 Move to the bow of the model and lay on your worktop keel 2, support 7 and bulkheads 18, 17, 16 and 15 which you can find on laser sheets 3550, 3551 and 3552.

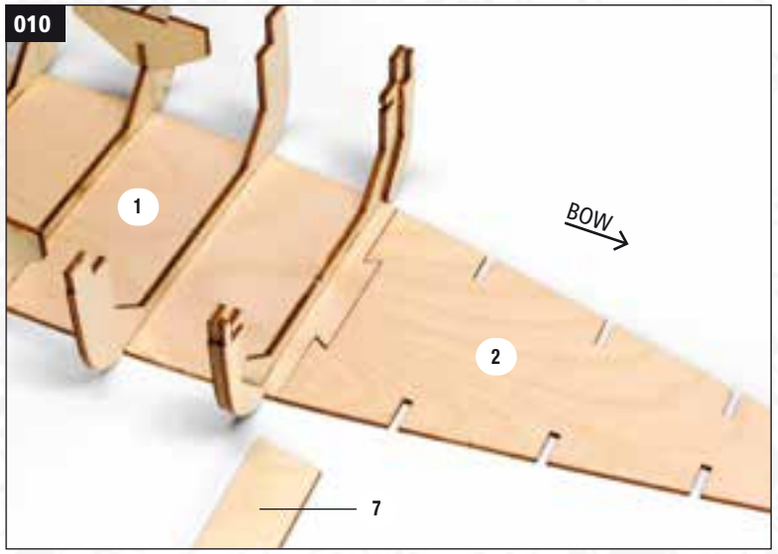

010 Try inserting keel 2 in the bow joint of keel 1; then glue with wood glue.

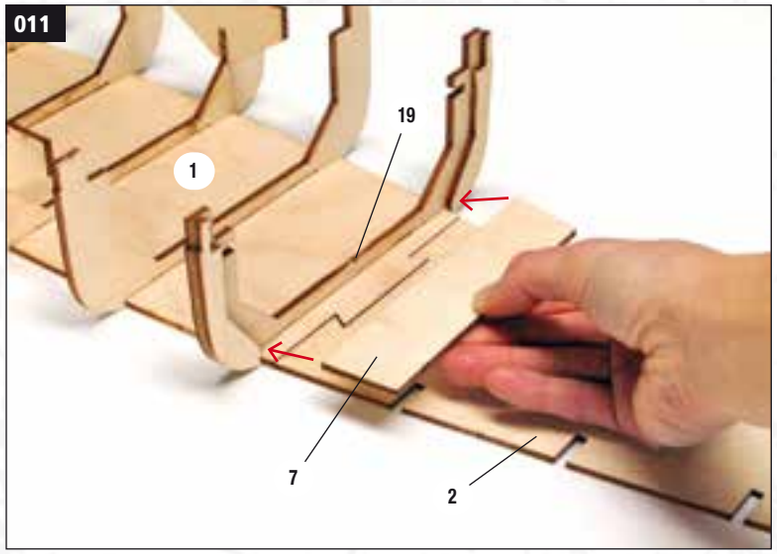

011 Take support 7 and place it on the joint of keel 1-2 against bulkhead 19. Check its positioning and glue.

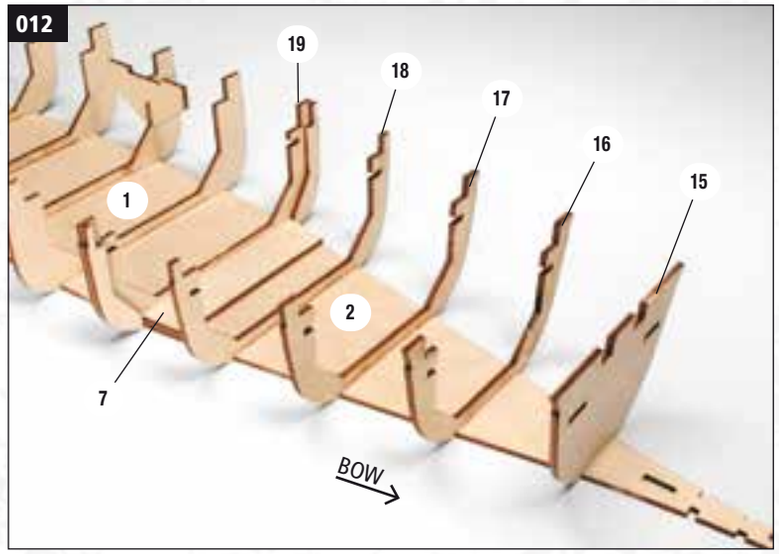

012 Move forward and try assembling bulkheads 18, 17, 16, 15 in the joints of keel 2. Check that they are perpendicular to the keel and parallel to each other; then glue.

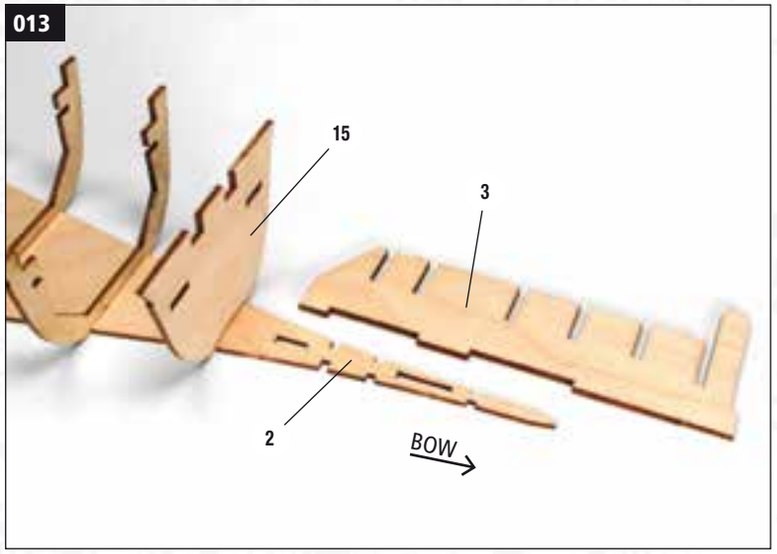

013 Move to the bow joints of the model and lay keel 3, which you can find on laser sheet 3552. Position it on your worktop as shown in the picture above.

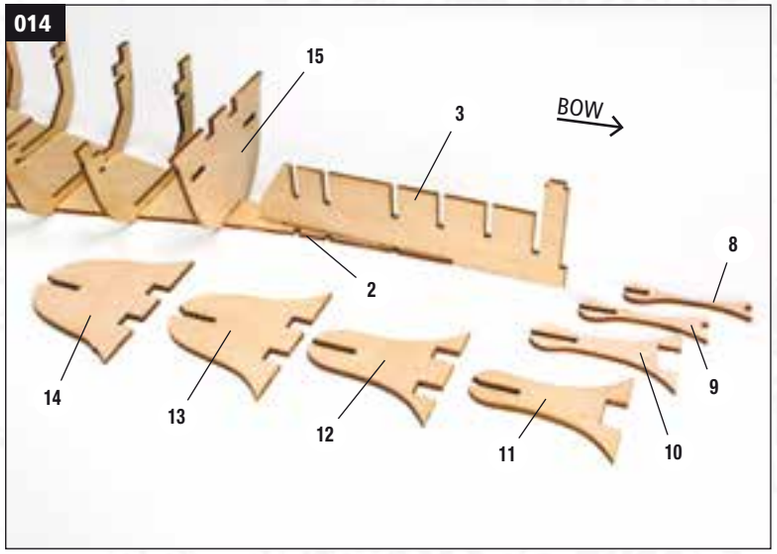

014 Place keel 3 in the joints of keel 2; check that they are perpendicular to each other; then glue with wood glue. Remove bulkheads 14, 13, 12, 11, 10, 9, 8 from laser sheets 3552 and 3551, smooth any imperfection and lay them on your worktop in the order shown in the picture.

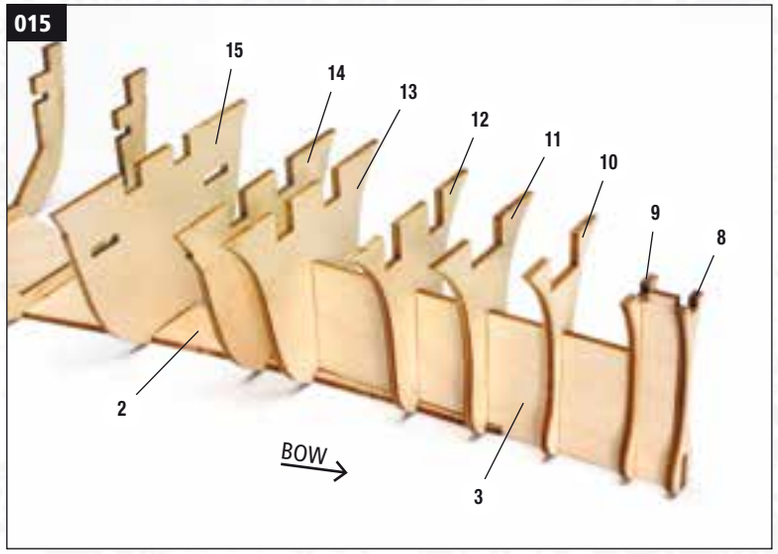

015 Insert the bulkheads in the upper joints of keel 3. Check that they are perpendicular to the keel and parallel to each other; then glue.

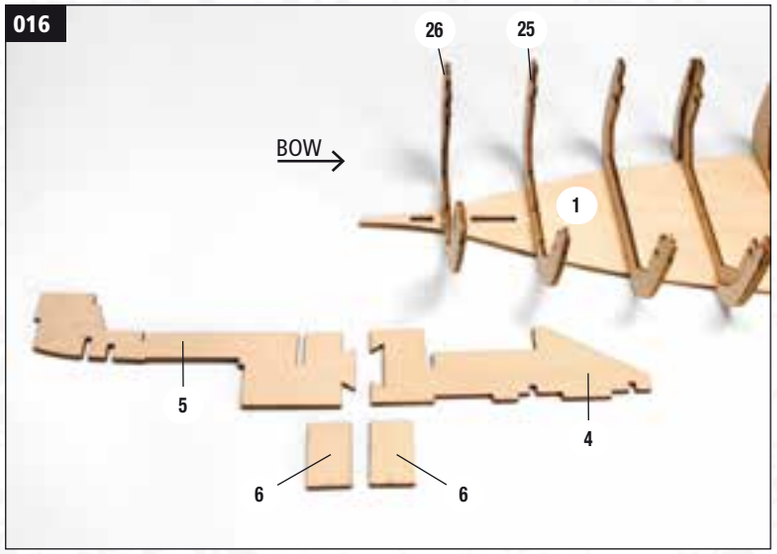

016 Move to the stern of the model and lay on your worktop keel 5, 4 and two supports 6 (x2) which you can find on laser sheets 3552 and 3551. The lower joints of keel 4 must be glued in the stern joints of keel 1 and of shells 25 and 26.

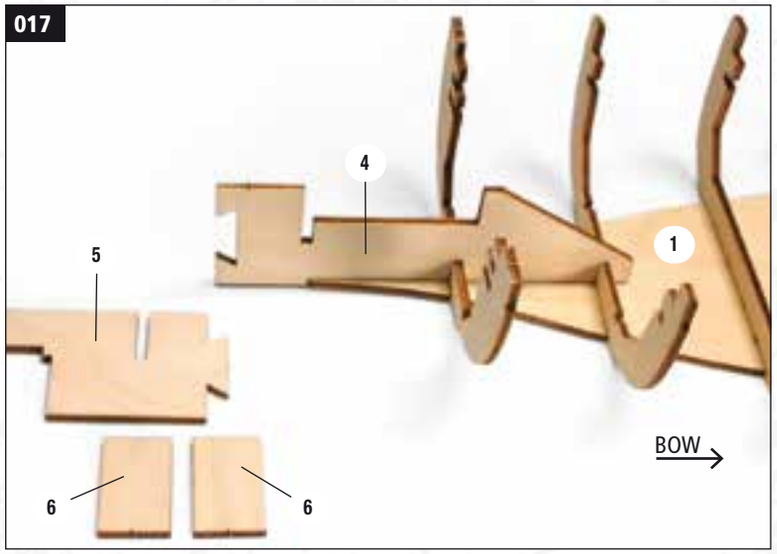

017 Try positioning keel 4 without glue oriented as shown in the picture above. Apply wood glue in the joints and fix it perpendicular to keel 1.

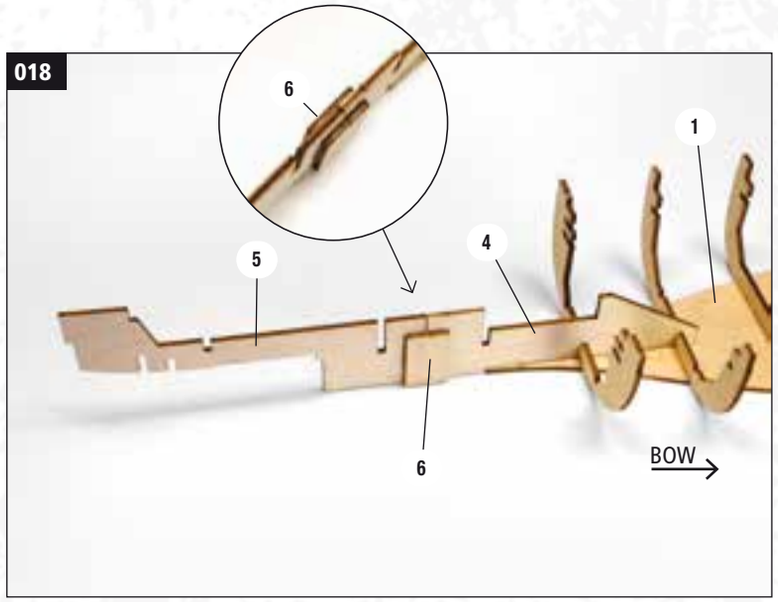

018 Glue the dovetail joint of the two elements 5-4 and the two supports 6 at the joint. Check that the pieces are perfectly in line with each other and that the lower part of the keel is on the same level of the worktop.

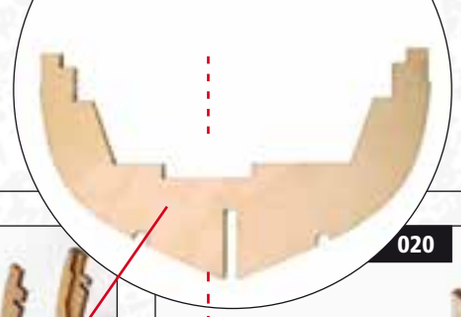

019

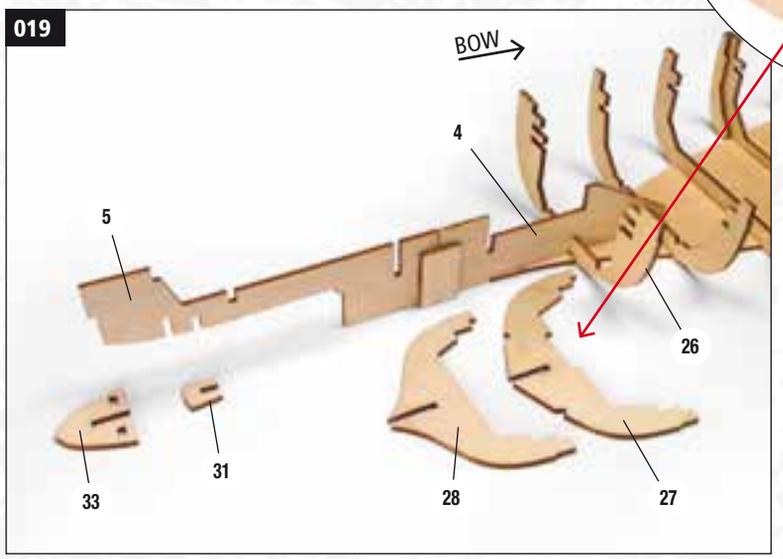

019 Lay pieces 27, 28, 31 and 33 on your worktop, which you must remove from laser sheets 3551 and 3552. Find their position in the joints along stern keel 5, 4. Warning: bulkhead 27 is not symmetrical; the central joint must be oriented towards the port side of the model (see detail).

020

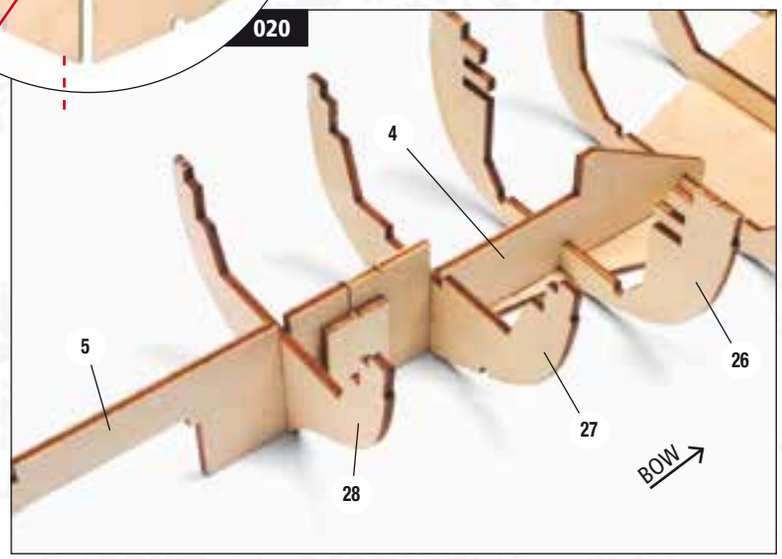

020 Apply wood glue inside the central joints of the bulkheads, then insert bulkheads 27 and 28 in keel 4 and 5 and glue them. Check that they are parallel to the bulkheads already applied and perpendicular to the keel (if necessary, use a set square).

021

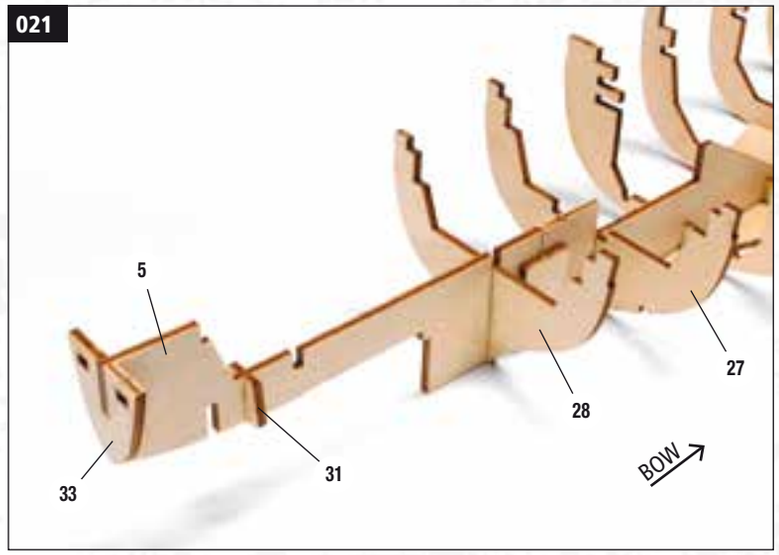

021 Move to the stern and in the same way glue pieces 33 and 31 in the joints on keel 5 as shown in the picture above. Leave to dry thoroughly before continuing.

022

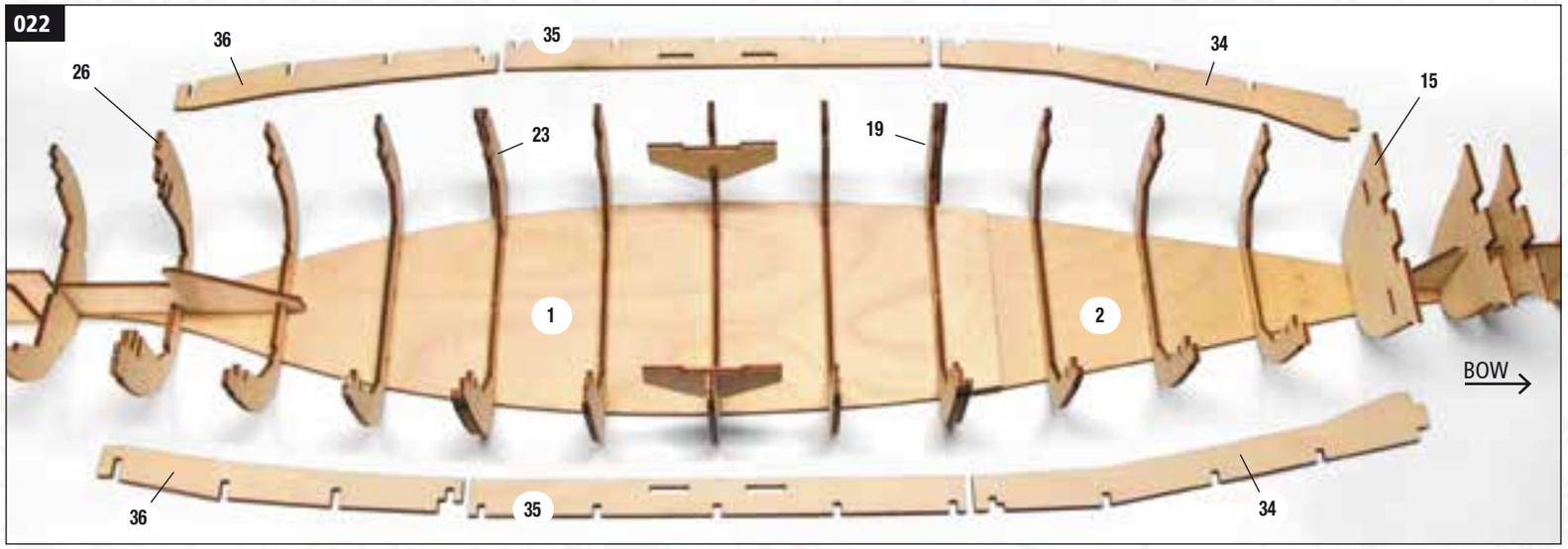

022 Prepare crossbars 36 (x2), 35 (x2) and 34 (x2), which you must remove from laser sheets 3550 and 3551 and glue to the central structure of the hull in the internal joints of the bulkheads from 26 to 15. Lay the pieces on your worktop as shown in the picture, with the joints pointing towards the outside.

023

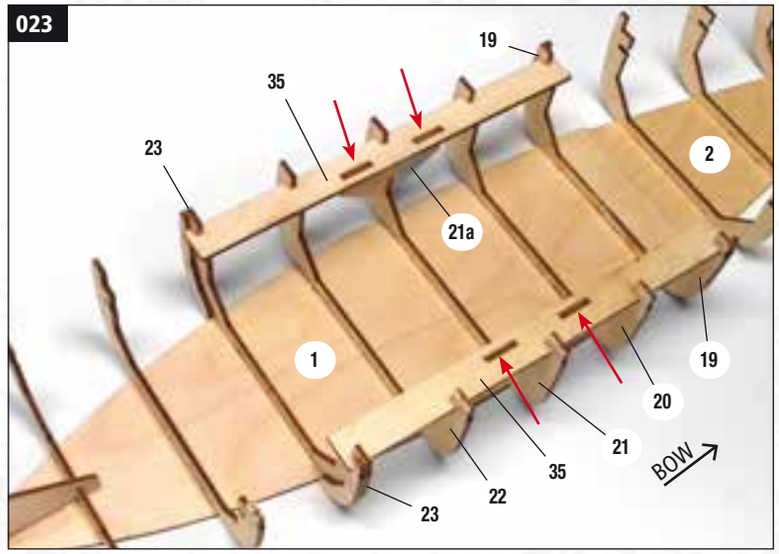

023 Glue the first two crossbars 35 in the central area of the hull, in the upper joints of bulkheads 23, 22, 21, 20, 19 and in the two supports 21a (red arrows), as shown in the picture.

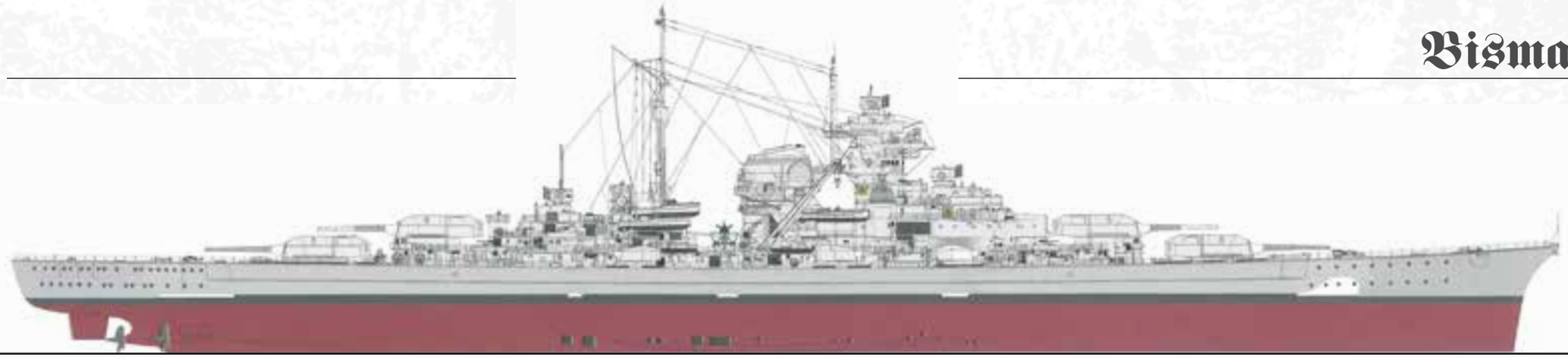

VERSION 1

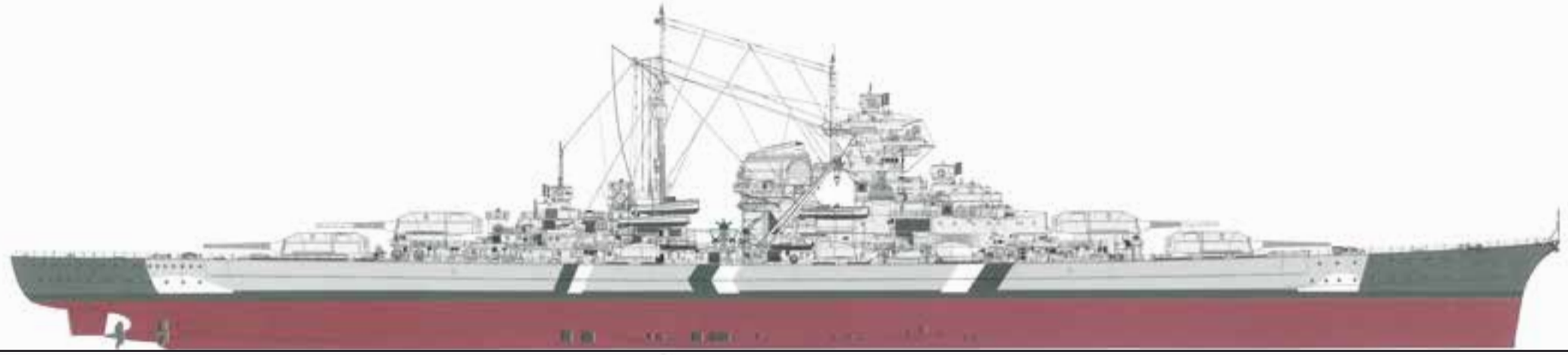

VERSION 2

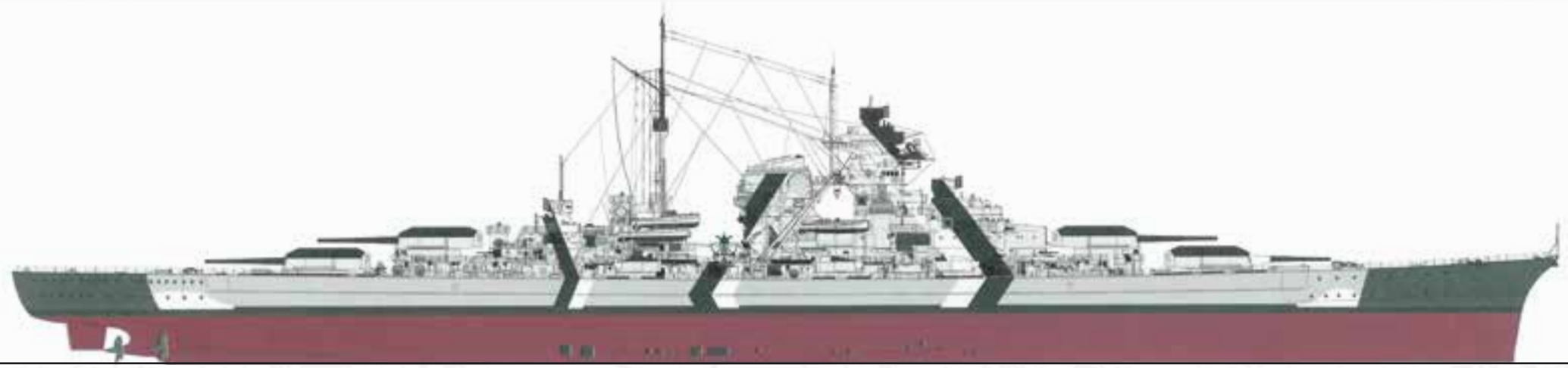

VERSION 3

The drawings illustrate three different versions of Bismarck's camouflage colouring. The battleship was painted in all three ways, in three different moments. In order to proceed in the subsequent assembly stages, you can choose the version you prefer. Warning: we recommend version 3, which is the most complex, to more expert and more skilled modellers in painting.
The hull colouring operations described in the subsequent assembly phases refer to version 1.

166

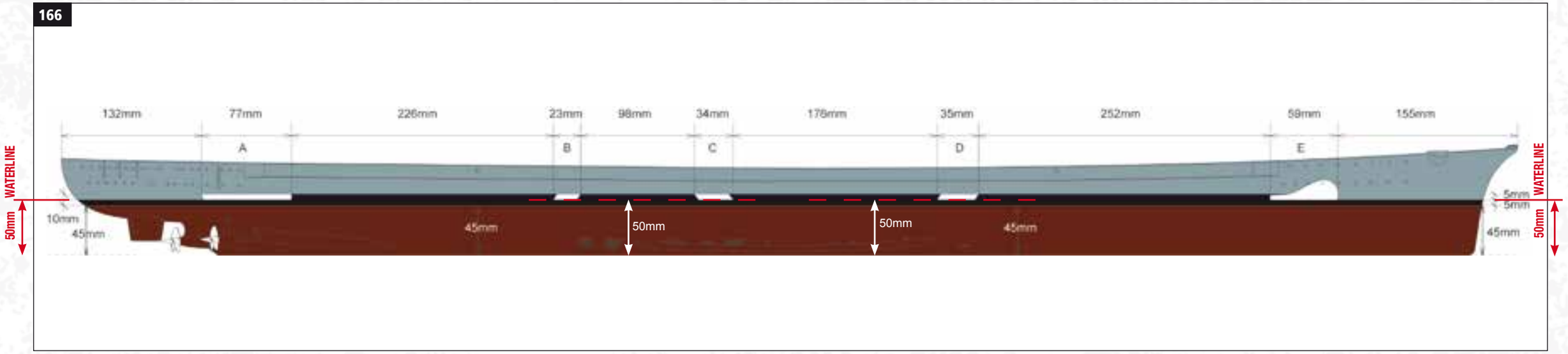

166 Now proceed with colouring the hull, in our case version 1. We recommend using acrylic spray paint. Before proceeding, please refer to the technical drawing shown in the picture above, it will serve as a reference to identify the colouring areas. The dimensions shown in the picture, which are the same for both the right and left sides, will be useful for tracing the dividing lines of the colours.

167

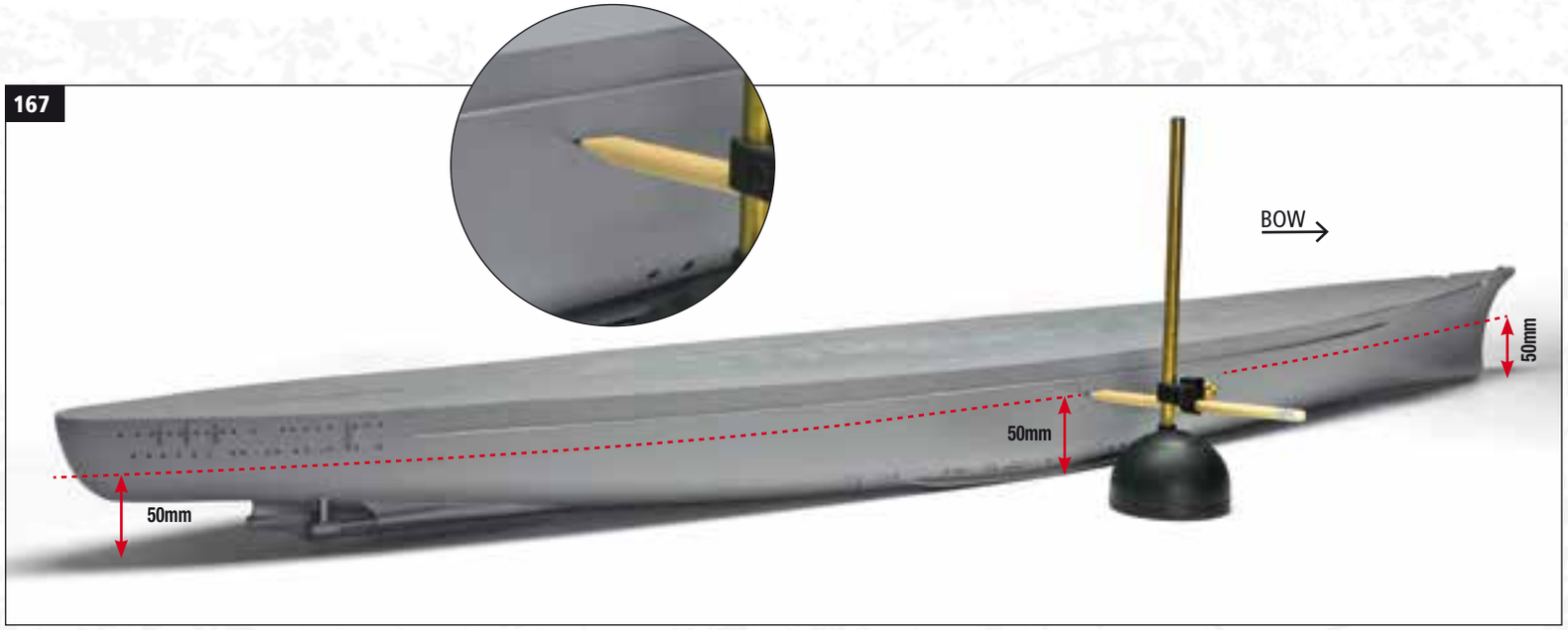

167 To begin, take the model and lay it on your worktop in an orthogonal position. With a pencil, draw the water line that must run on both sides 50mm above the keel, as shown in the photo. To perform this step, we recommend using a tracker (Amati 7378).

168

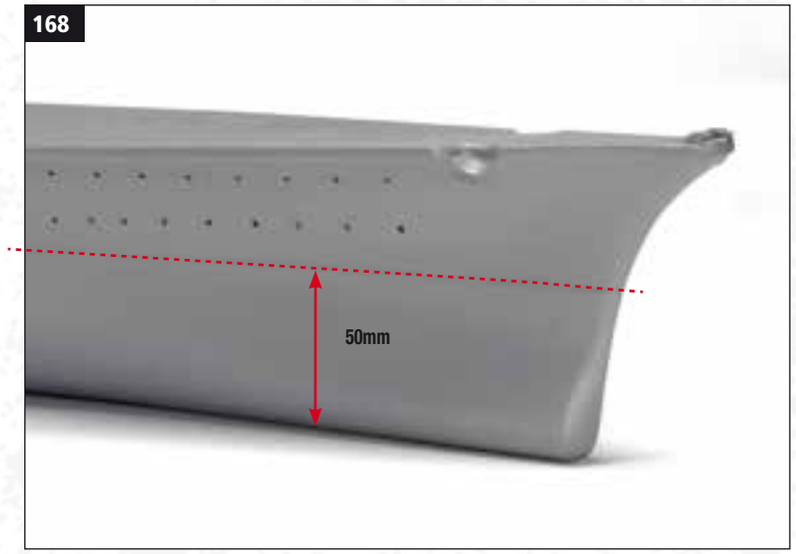

168 The picture shows the trend of the water line at the bow section of the model.

169

170

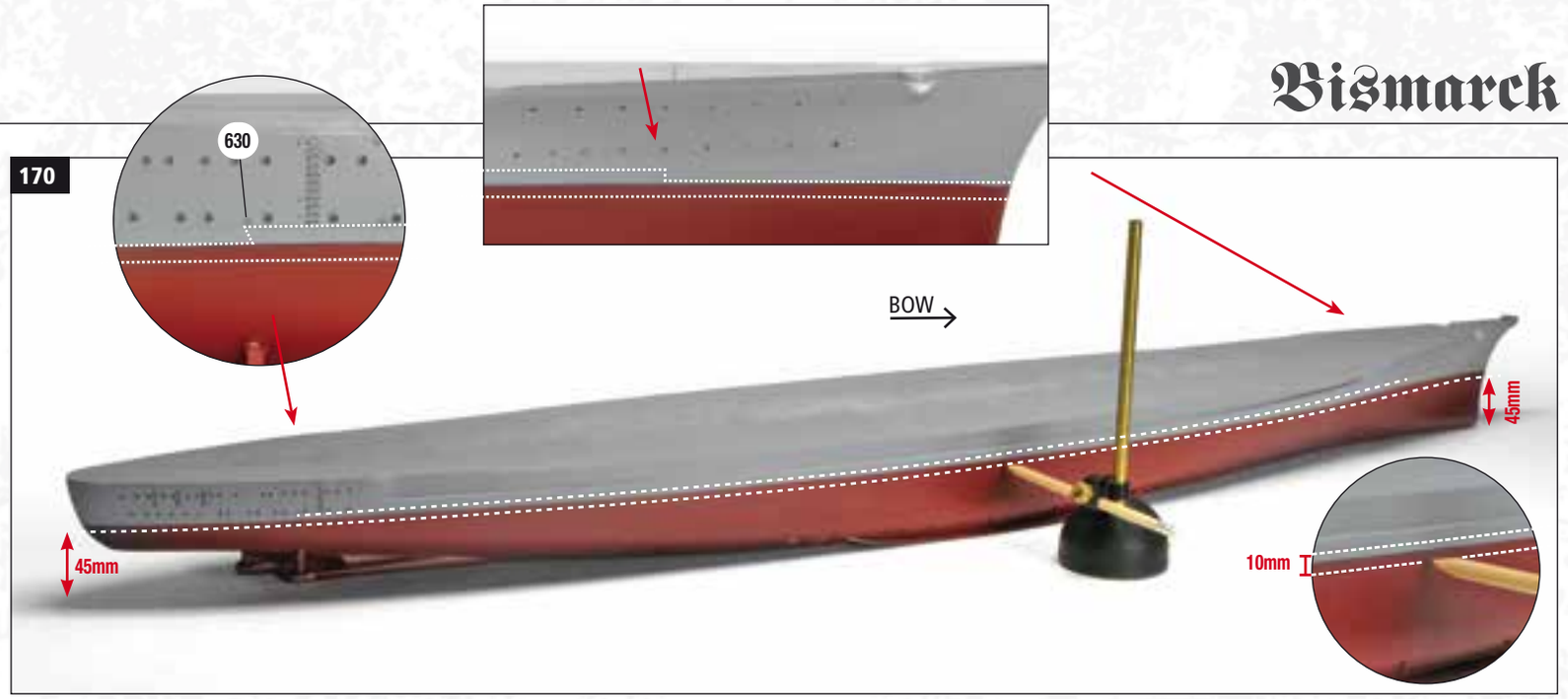

169 With wrapping paper and paper tape, mask and cover the model above the line just drawn in order to preserve the decks and the section of the hull above the waterline. Do this on both sides of the model.

170 Using Ral 8012 brown red colour paint, colour the part of the hull located below the water line. Warning! Let the paint dry well, then remove the paper and the paper tape strips with which you covered the top of the model. Observe drawing 166 and draw in pencil the two reference lines to be able to colour the black band that runs along the hull 5mm below the waterline and doubles in the central part of the hull 5mm above the waterline. See also the detailed pictures to identify the breakpoints of the double black line: towards the bow from the fifth porthole and towards the stern from eyelet 630. Break the black line towards the stern with a small inclination towards the centre of the hull as shown in the detail at the top left. Always work on both sides.

171

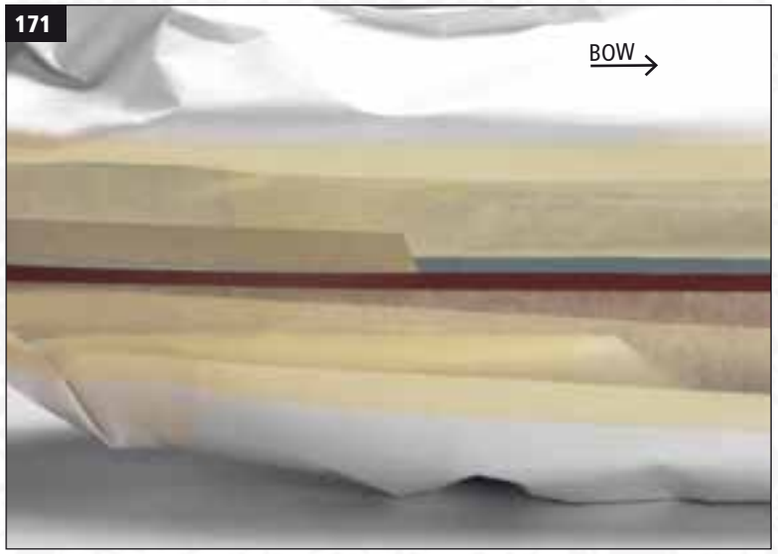

172

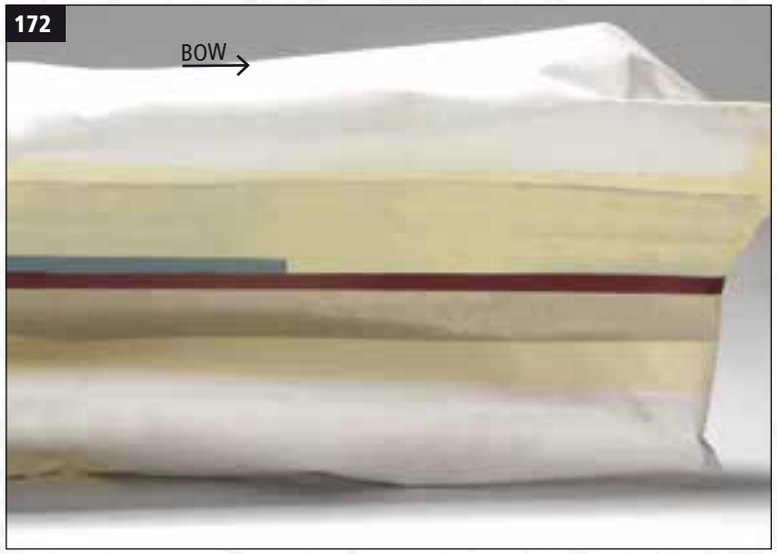

173

171-172 Mask the model above and below the lines drawn so that you can proceed with the colouring of the black band. At the points of interruption towards the bow and stern of the double black line, resume masking along the waterline. Mask the eyelets which protrude from the hull towards the stern and that are close to the upper limit of the black line. The central part of the hull that corresponds to the black band must be free of masking as shown in the pictures above. As you can see from the initial scheme, part of the colouring will be the final one; while the rest will be the background for the white tiles, which you will colour following the next steps.

173 With a matt black spray paint, colour the central part of the hull on both sides. The picture shows the final result of the colouring of the black band towards the stern.

174

174 The picture shows the final result of the colouring of the black band towards the bow.

175

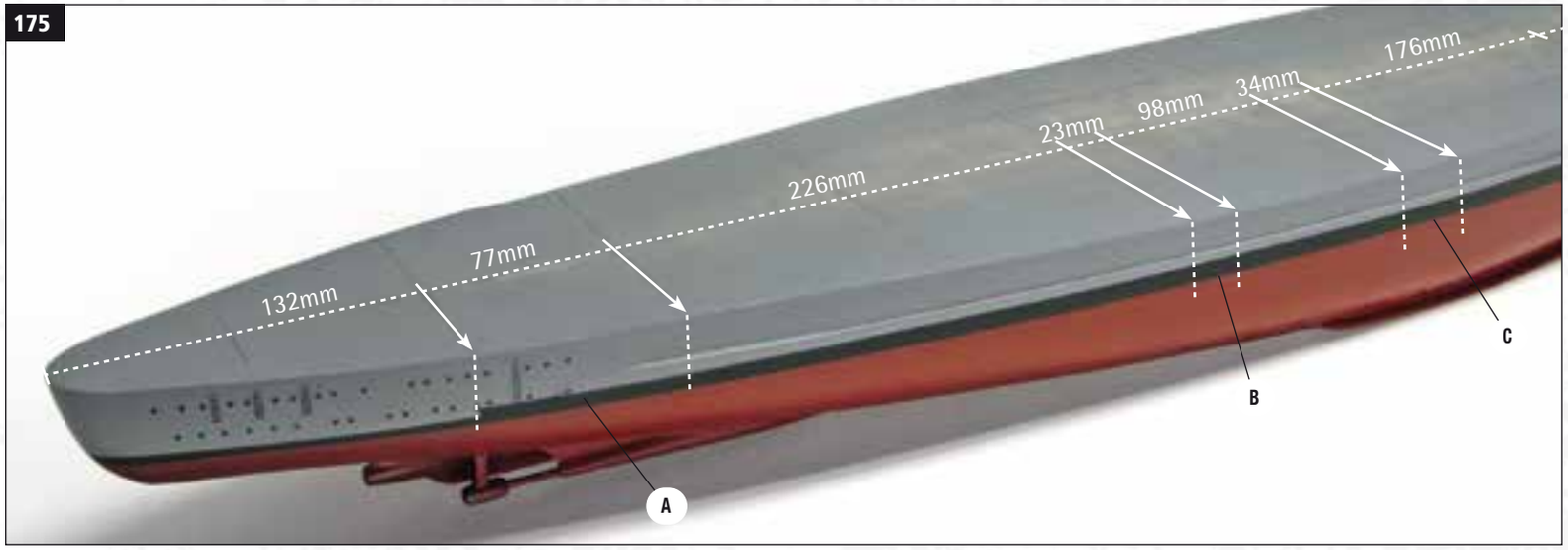

175 Now position yourself on the deck and locate the centreline, bring the dimensions shown in the picture and technical drawing 166 to the edge of the bulwarks. Move perpendicularly on the side of the hull and mark in pencil on the black band the position of the white pieces, A-B-C which correspond to the three cardboard masks that you will need for colouring, see step 179.

176

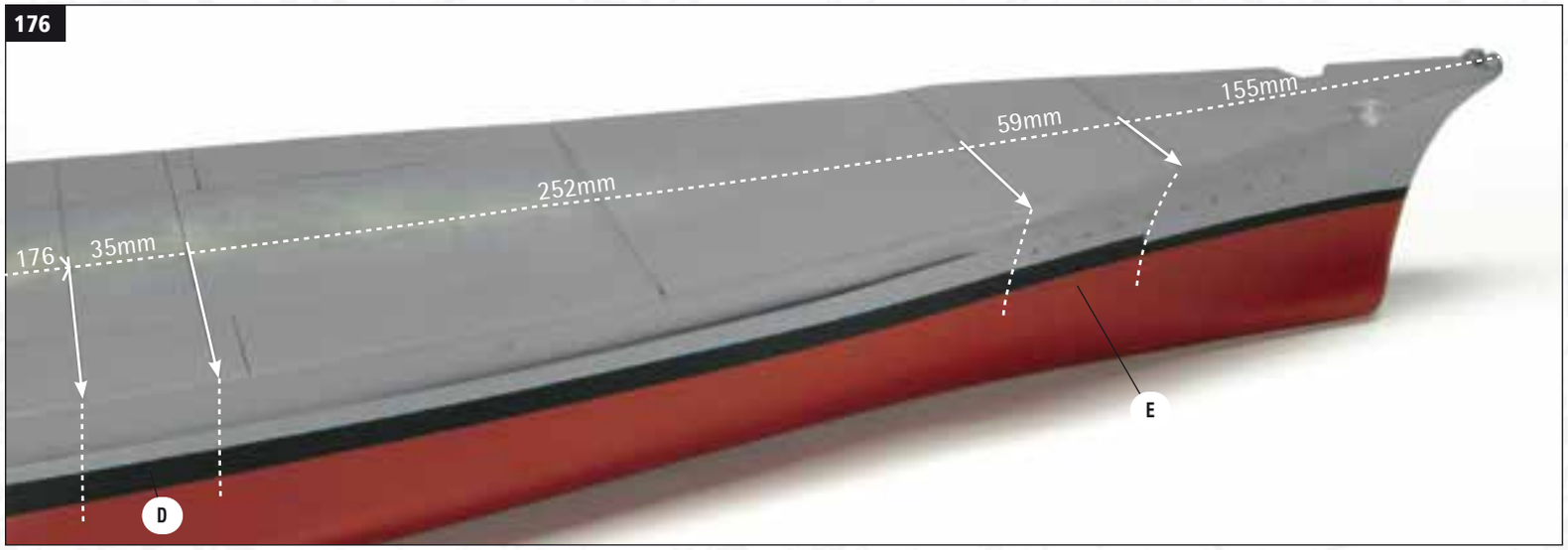

176 Move to the bow and in the same way mark in pencil the dimensions shown in the picture on the edge of the bulwark and then on the side. Always work on both sides of the model.

177

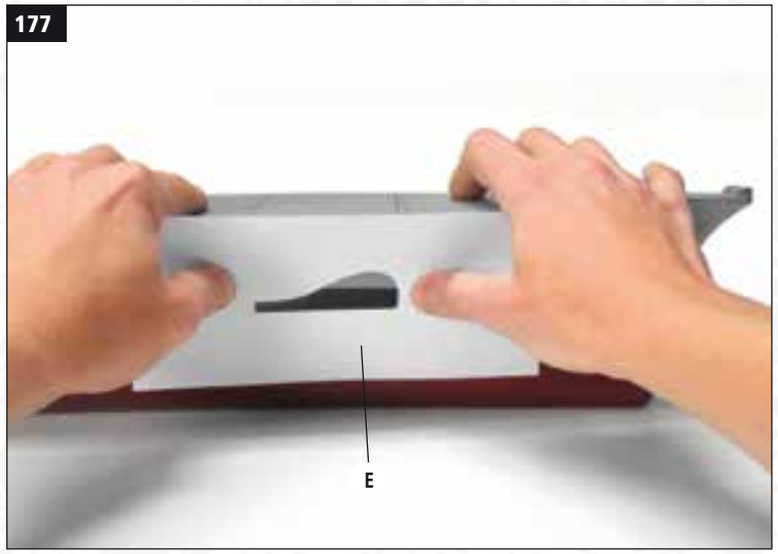

177 Cut out the five cardboard templates from the printed adhesive sheet: A, B, C, D, E on the starboard side and try to position them dry on the signs traced on the hull. Remove the double-sided adhesive backing on the back of the cardboard and attach the mask on the hull in place.

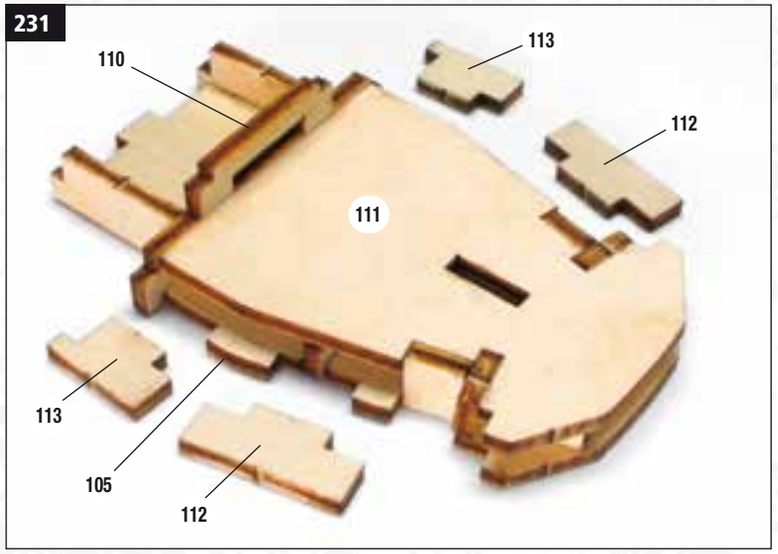

231 Insert roof 111 in the joints of the side pieces. Glue it in place and remove the four side walls 112 (x2) and 113 (x2), two on each side, from sheet 3554.

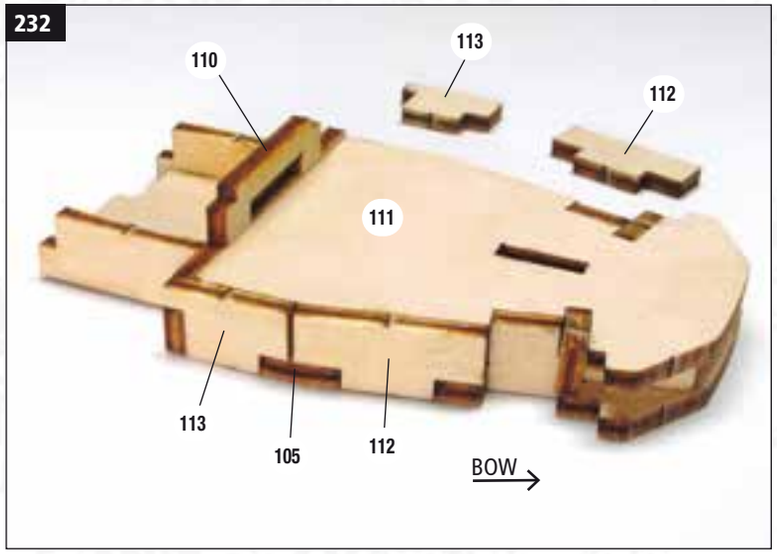

232 Lean walls 112 and 113 on the starboard side of the structure, in the joints of base 105 and wall 110; then glue.

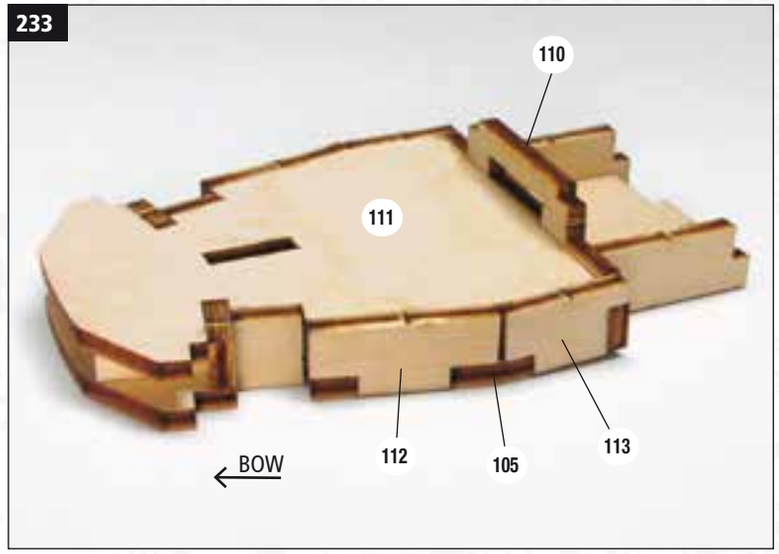

233 Rotate the structure and glue the other two walls on the port side.

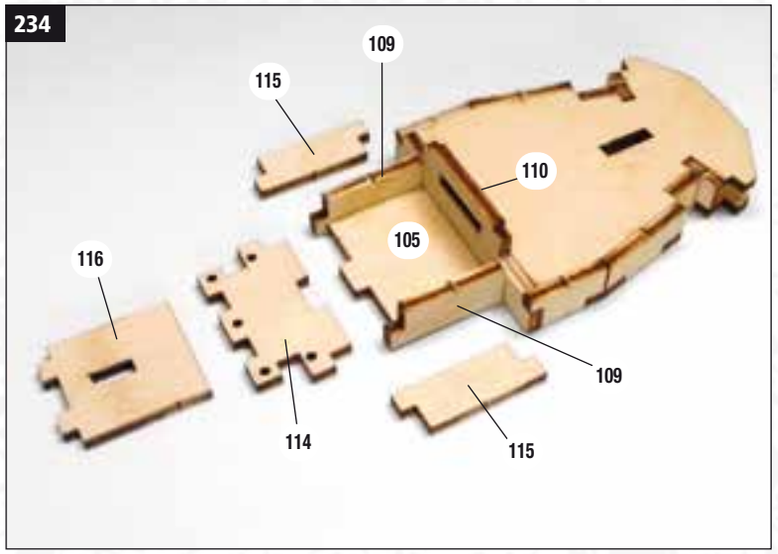

234 Move to the rear area of the structure and prepare the pieces presented in the picture above, which you can find on laser sheet 3554.

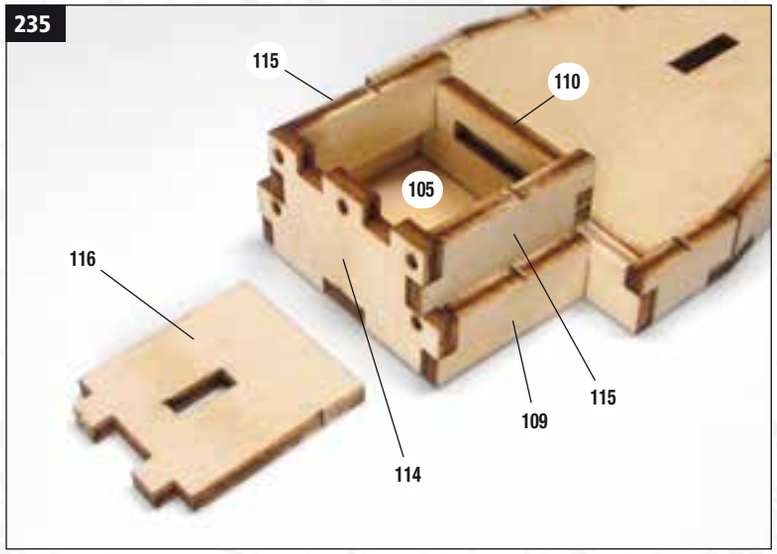

235 Fasten piece 114 and sides 115 of the structure perpendicular to each other.

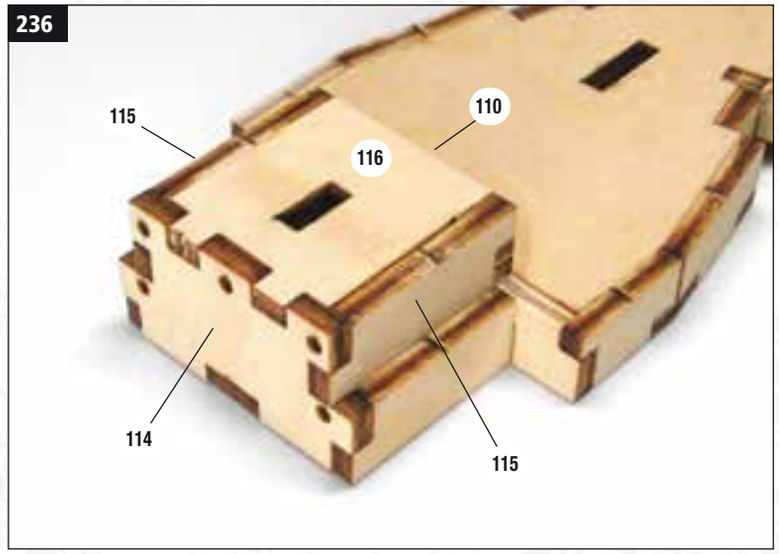

236 Close with roof 116 and glue it with wood glue in the joints of wall 114 and resting on wall 110. Temporarily put this structure aside.

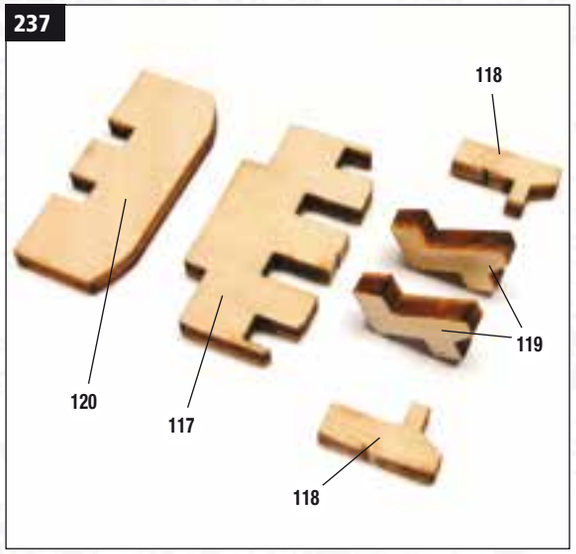

237 Using pieces 117, 118 (x2) 119 (x2) and 120 which you can find on laser sheet 3554, move on to the assembly of another smaller structure which will be later fixed on the structure assembled in the previous phase.

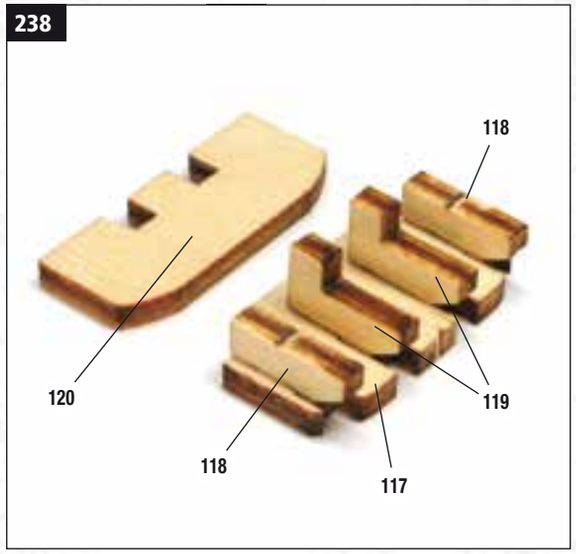

238 Insert pieces 118 (x2) and 119 (x2) into the joints of base 117 by orienting the inclined side downwards, then glue with wood glue.

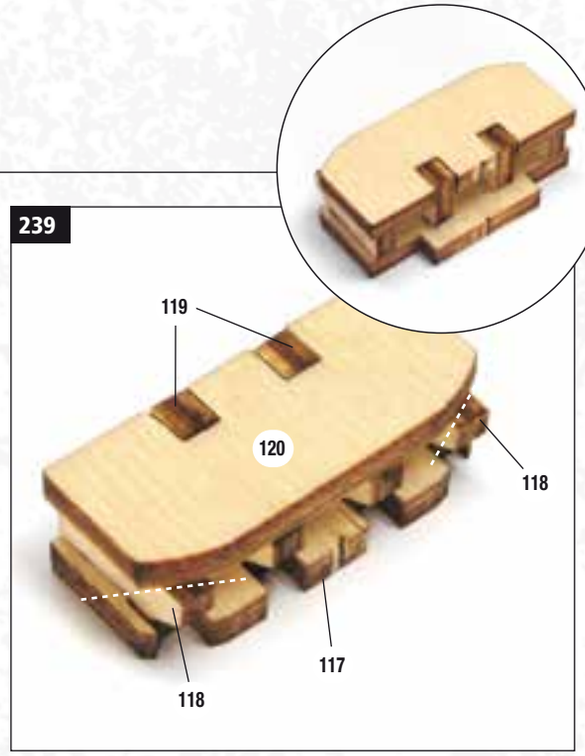

239 Close with roof 120 and glue it in the upper joints of central pieces 119. The detail above shows the structure seen from the opposite side. As you can see, the two pieces 118 protrude from the profile of roof 120 (white lines).

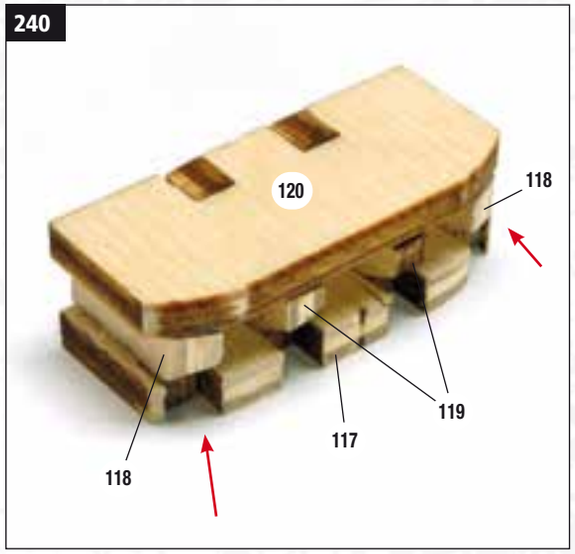

240 With a small file, remove these protrusions and bring the two side pieces 118 flush with the roof. Temporarily put this structure aside.

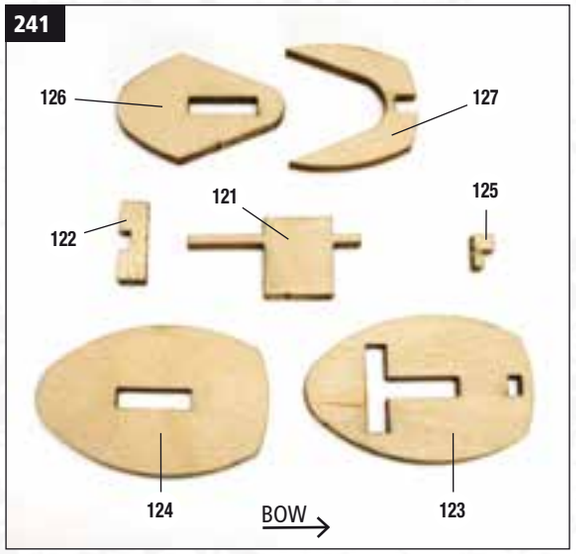

241 Move on to the assembly of another small structure with the use of the pieces shown in the picture above and which you can find on sheet 3554.

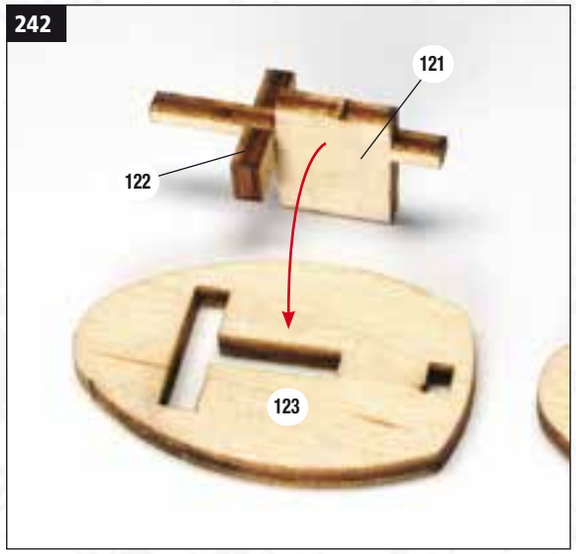

242 Assemble the two pieces 121 and 122 together, placing 122 on the lower side of the longer arm of piece 121.

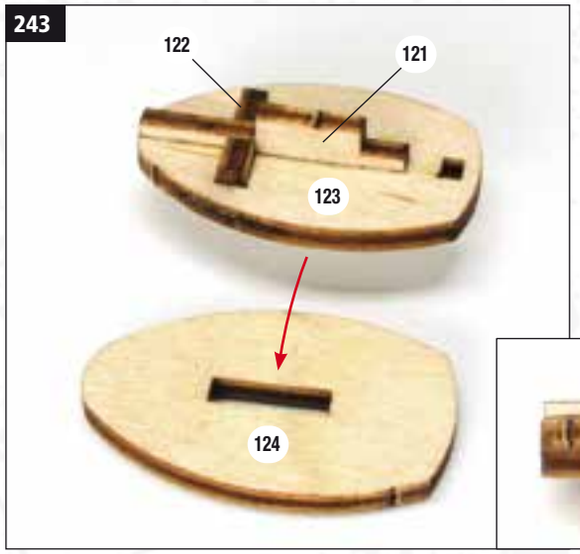

243 Insert group 121-122 in the "T" joint of piece 123. The lower side of piece 121 must protrude under base 123 in order to receive piece 124.

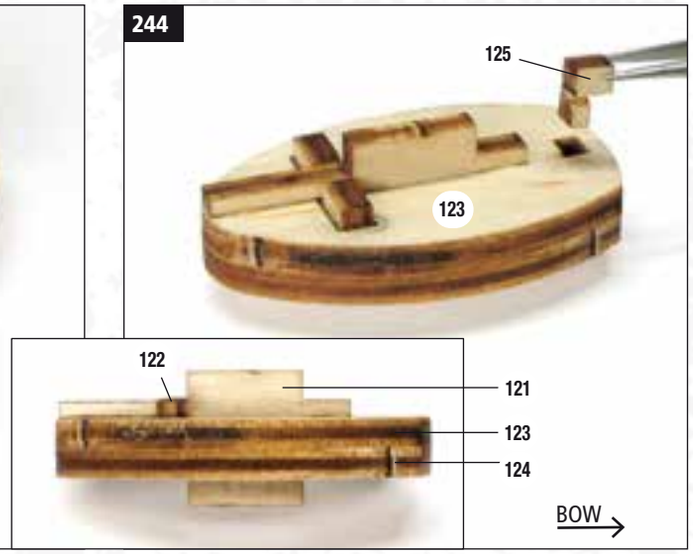

244 Glue piece 124 under the structure and check the correct assembly from the picture in detail. Insert and glue piece 125 in the joint of piece 123. Be careful to correctly orient the elements.

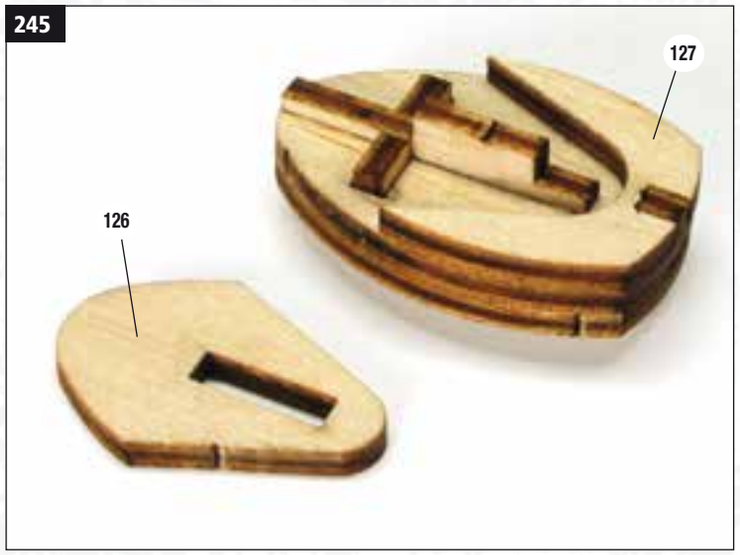

245 Align piece 127 over the structure and glue.

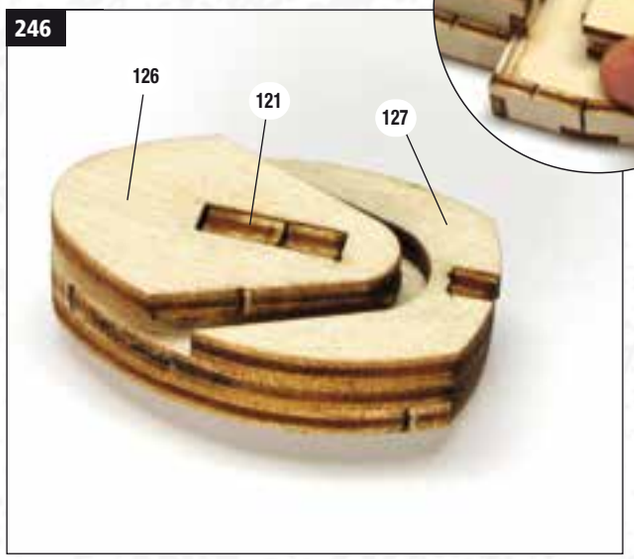

246 Complete with piece 126 inserted in the upper joint of piece 121; then glue.

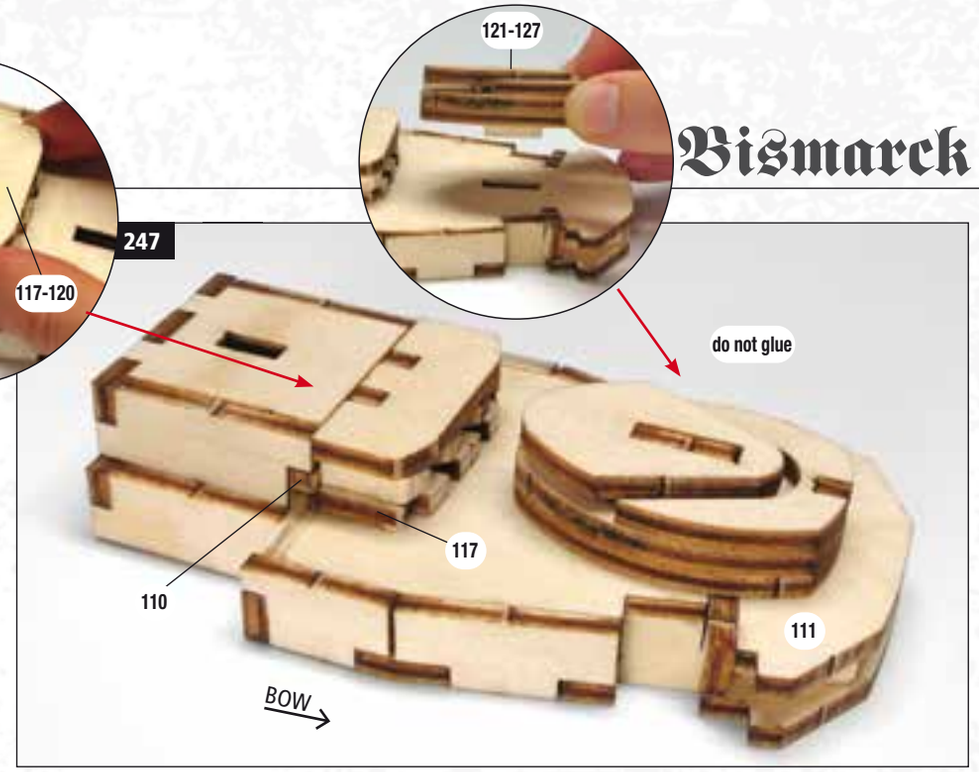

247 The three structures are ready. Overlap and insert group 117-120 in the joint of wall 110 (see detail); then glue. Take group 121-127 and try it without in the joint of deck 111. To facilitate subsequent assembly, we recommend that you do not glue it to the deck yet.

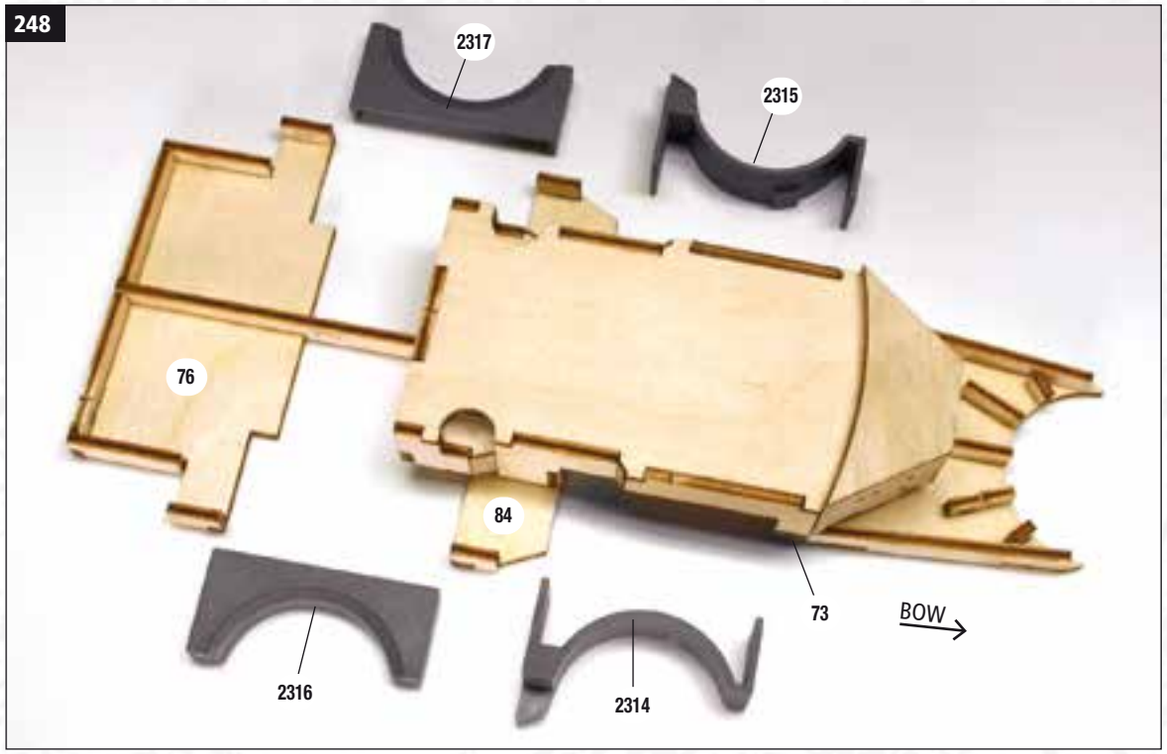

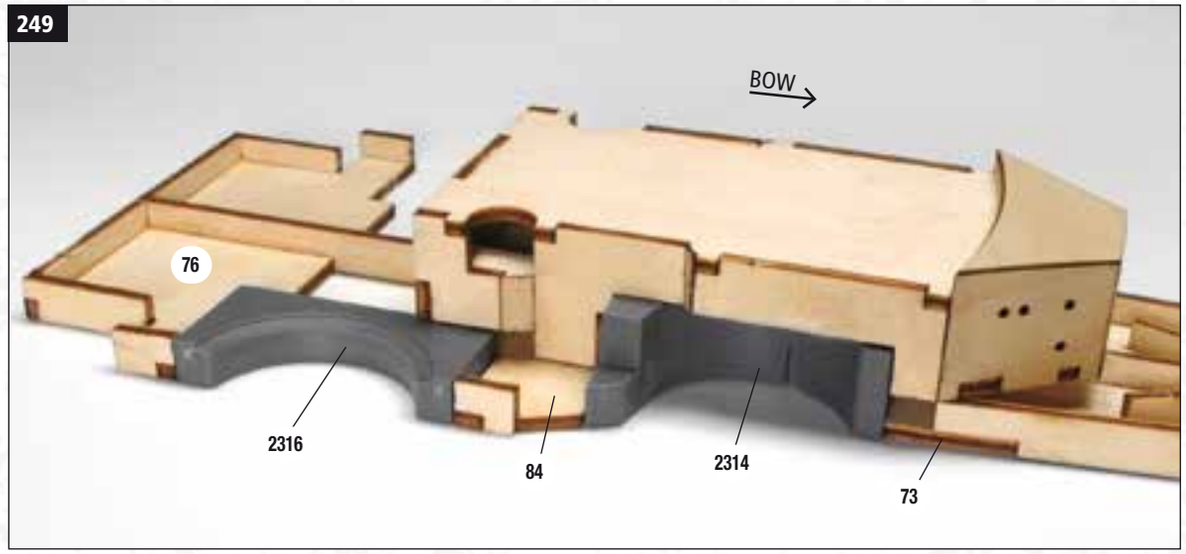

248 With a cutter, cut the attachments notches of the sprues P4 and P3 and separate the four arches 2314, 2315, 2316, 2317. Clean the pieces with a file and some sandpaper. Lay them on your worktop together with the bow structure oriented as shown in the picture on the left.
249 Insert the two arches 2314 and 2316 in the two empty spaces at the base of the structure on the starboard side up to the stop points on the three bases 76, 84, 73. Check their position and alignments; then spread superglue on the contact points.

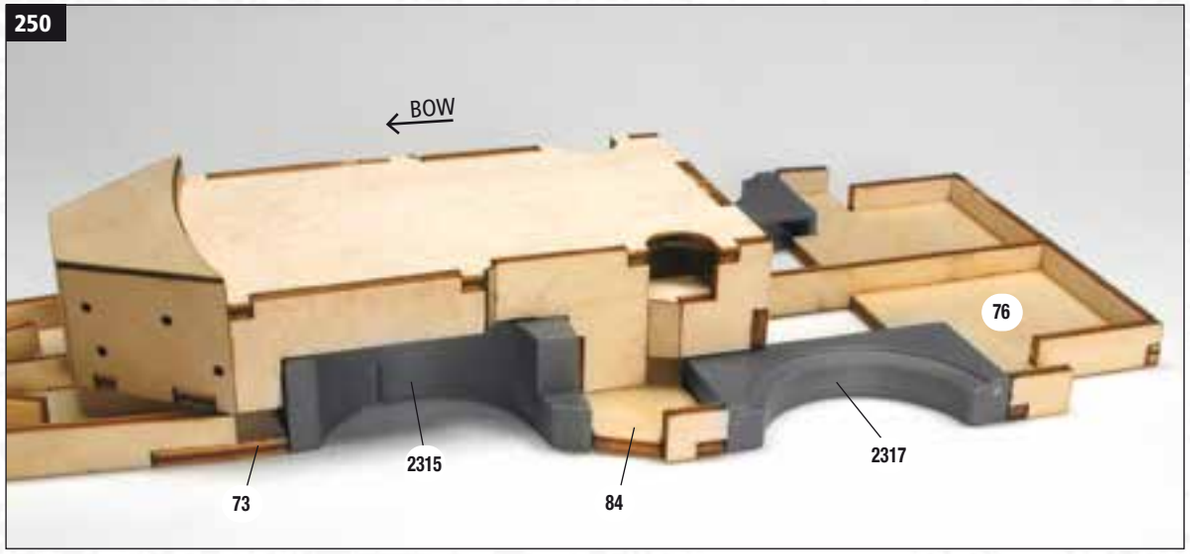

250 Rotate the structure and replicate the assembly of the arches on the port side using plastic pieces 2315, 2317. See also the next step.

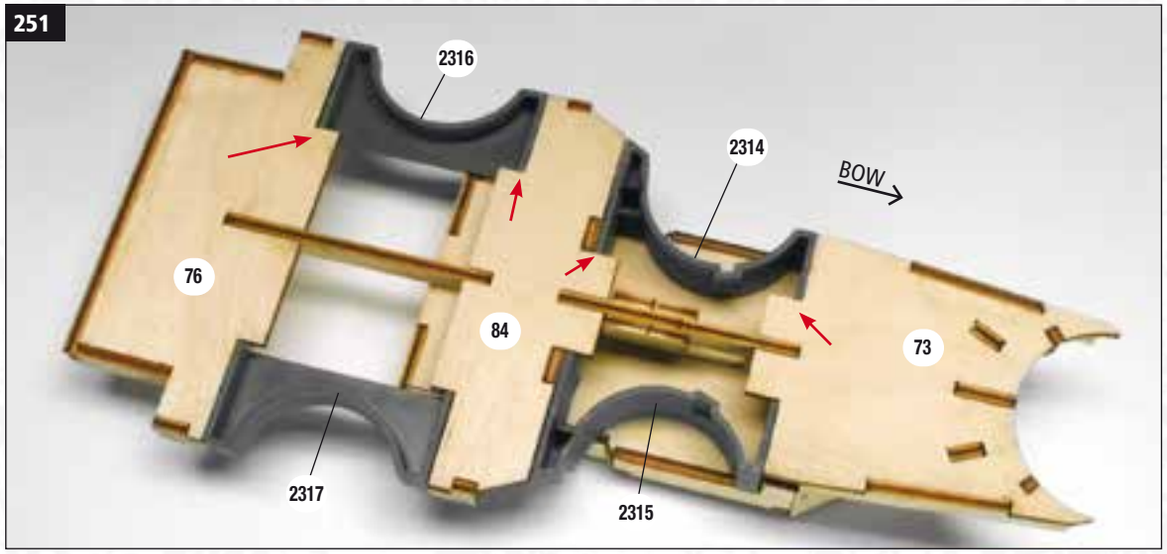

251 The picture shows the inverted structure complete with the assembly of the four plastic arches.

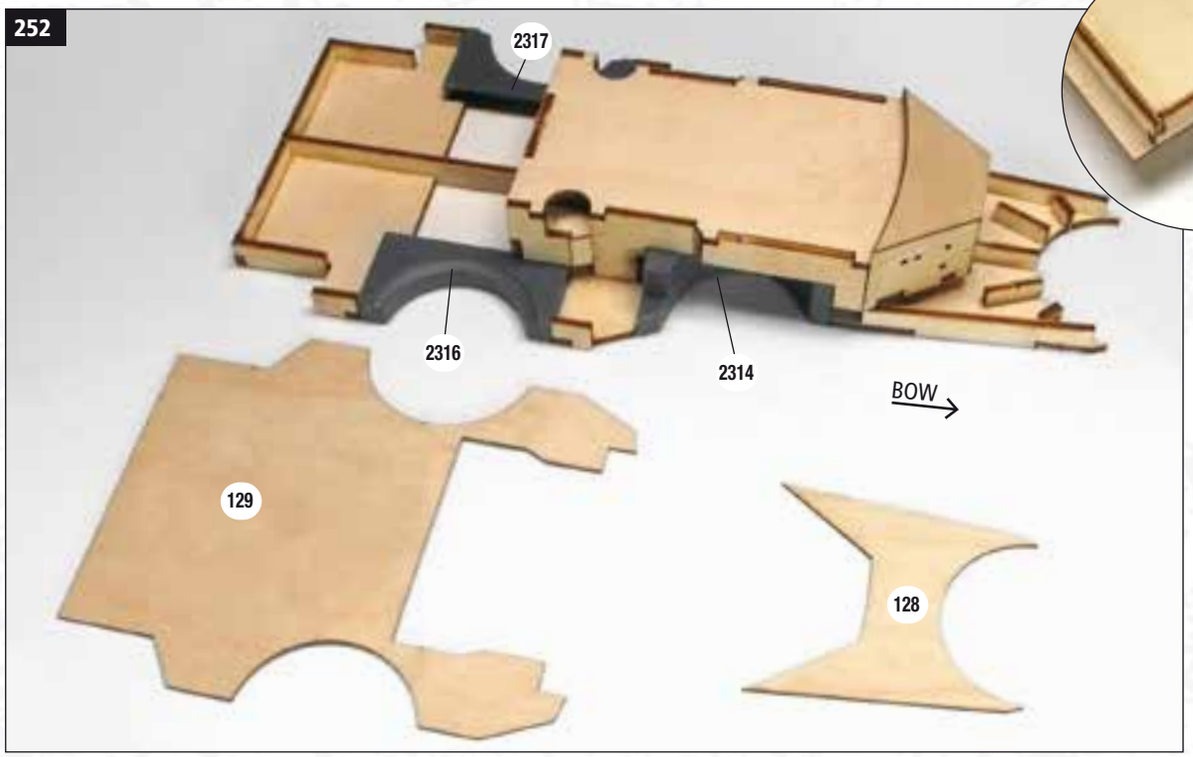

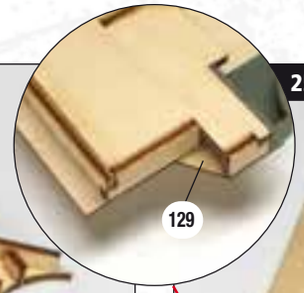

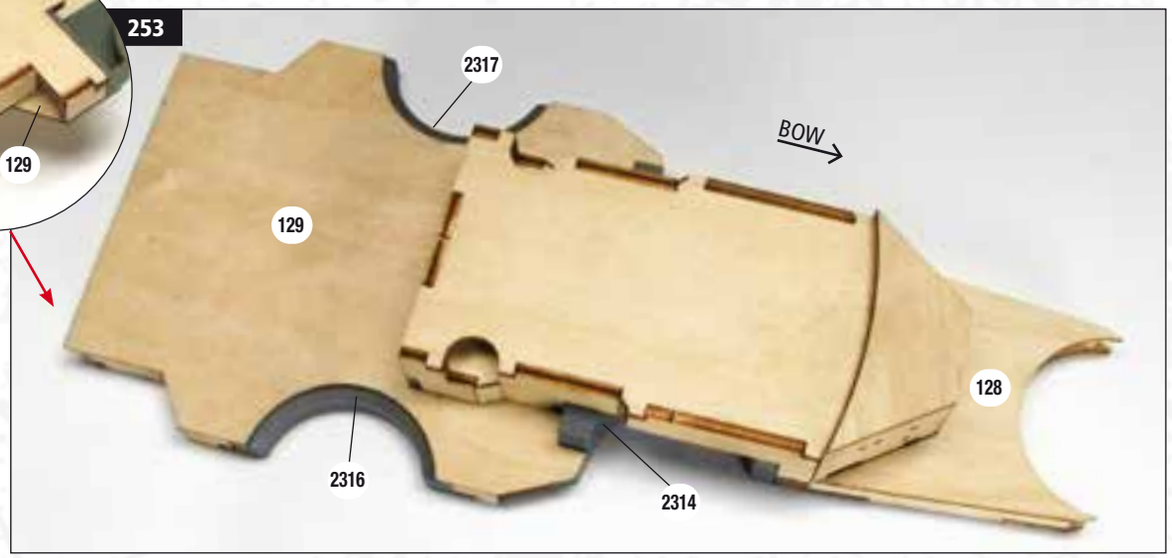

252 Now remove the two decks 128 and 129 from laser sheet 3556A, which will be inserted from above onto the structure.
253 Perform tests without glue to check the alignment of the pieces. Spread a layer of wood glue on the upper edges of the bow crossbeams and glue deck 128; then move to the stern and spread a layer of glue on the upper edges of the wooden walls of the cabins; then glue deck 129 in place. The picture in detail shows the upside-down structure highlighting deck 129 which protrudes beyond the outer edge of the cabins.

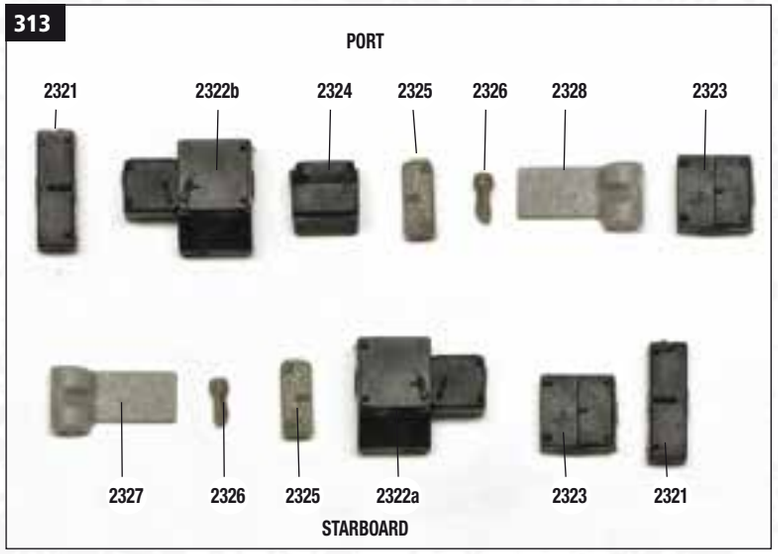

313 Now prepare the plastic components to set up the walls of the bow superstructure; you can find them in sprues P51, P24 and P25.

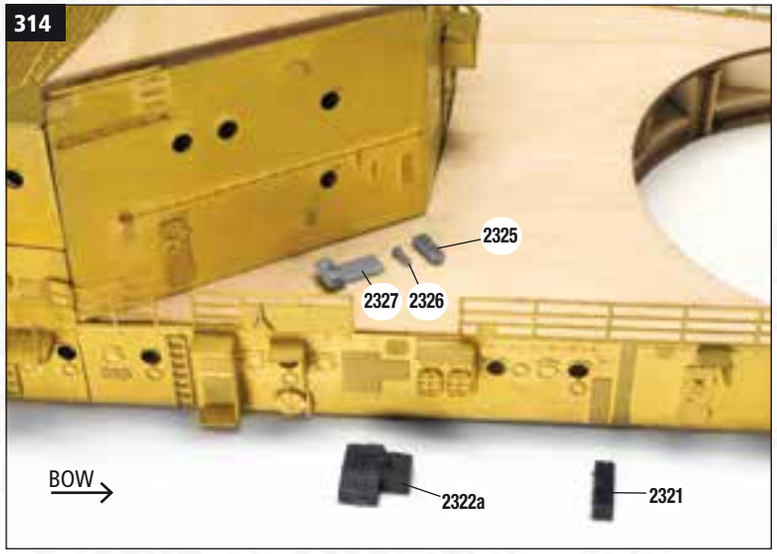

314 On the reliefs engraved on the walls on the starboard side of the superstructure, find position of each accessories 2321, 2322a, 2325, 2326, 2327.

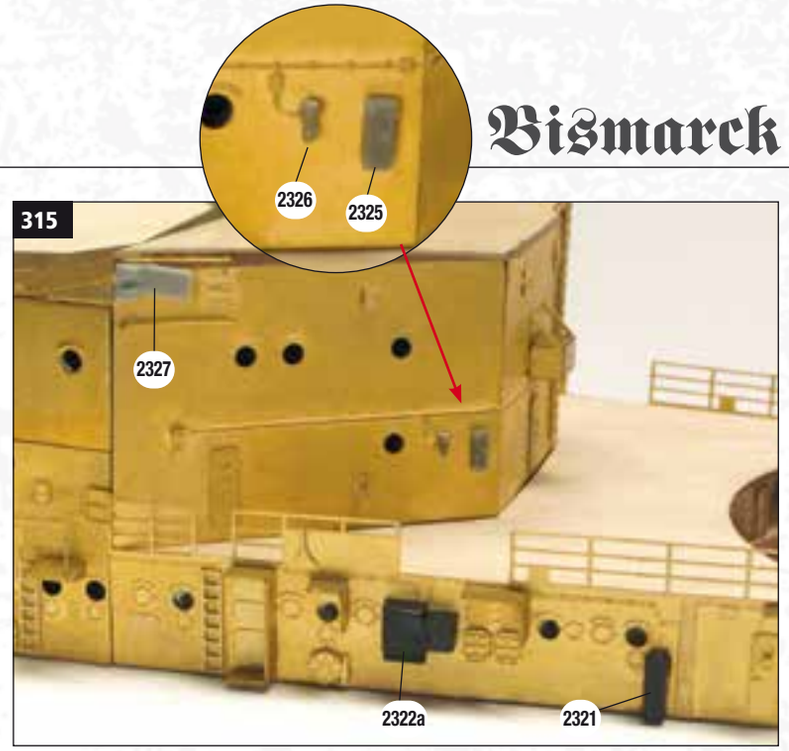

315 Orient the pieces as shown in the picture and glue them in place.

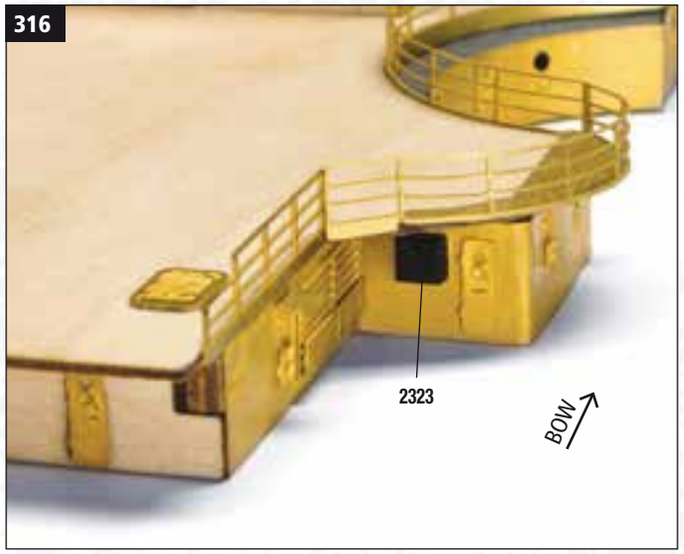

316 Move to the stern and glue cabinet 2323.

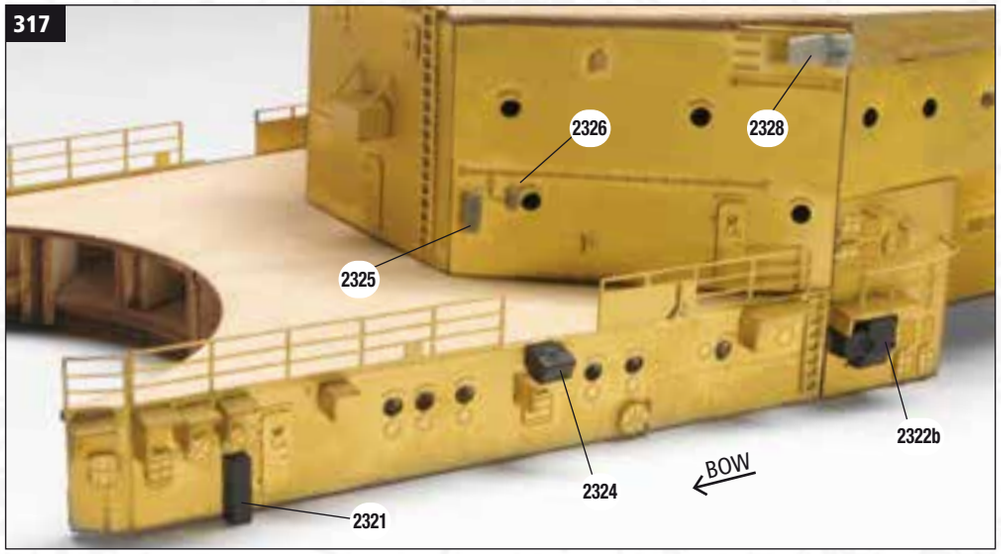

317 Rotate the structure and glue accessories 2321, 2324, 2322b 2325, 2326, 2328 to the covering walls of the superstructure on the port side.

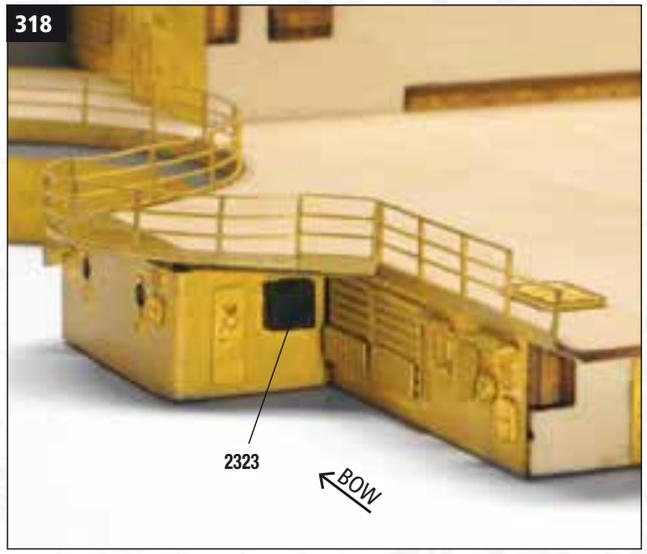

318 Move to the stern and glue the other cabinet 2323 on the port side of the superstructure.

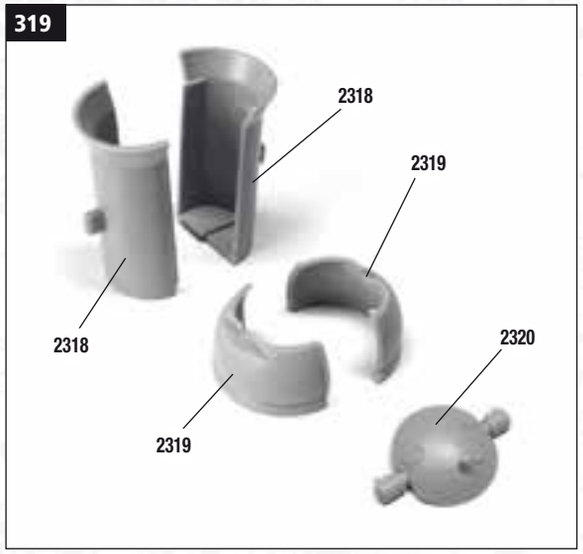

319 Remove from sprue P23 the two halves of support cylinder 2318 (x2), the two halves of the base of dome 2319 (x2) and cap 2320 with the range finders; you will use them to prepare one of the two anti-aircraft shooting positions, which will be assembled on the sides of the bow superstructure.

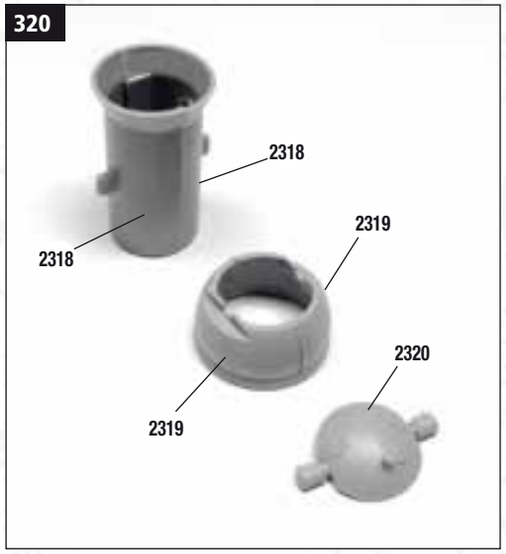

320 Join without glue the two halves of cylinder 2318 and base 2319; after checking that they coincide perfectly, fix them definitively with superglue.

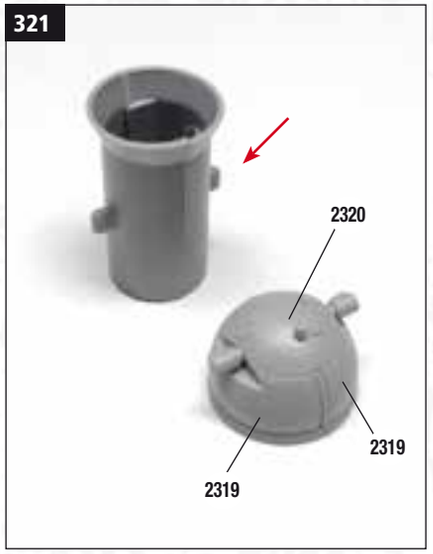

321 Glue dome 2320 on base 2319, placing the two range finders in the upper lateral joints of the base. Remove one of the two protrusions on the sides of the cylinder with a cutter, leaving only one.

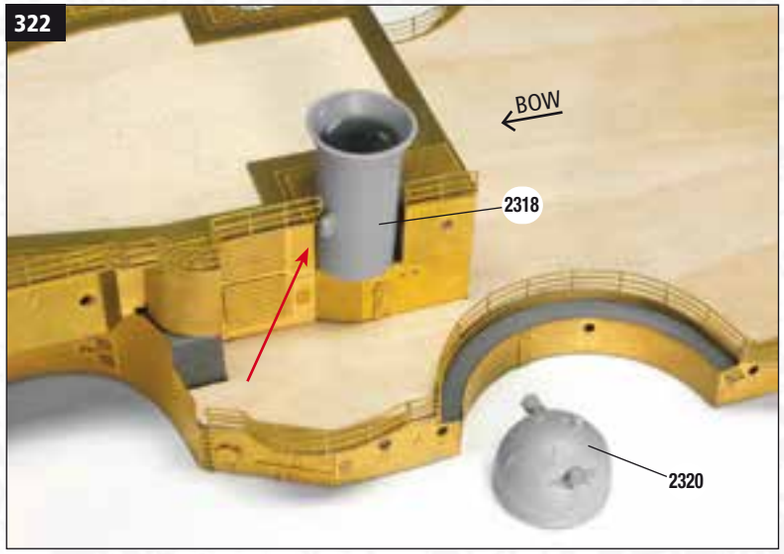

322 Take the bow superstructure and provisionally apply the cylinder in the semicircular cut out located on the port side of the second level deck. Position it so that the protrusion on the cylinder points towards the bow and at an angle almost with respect to the handrail (red arrow). Do not glue!

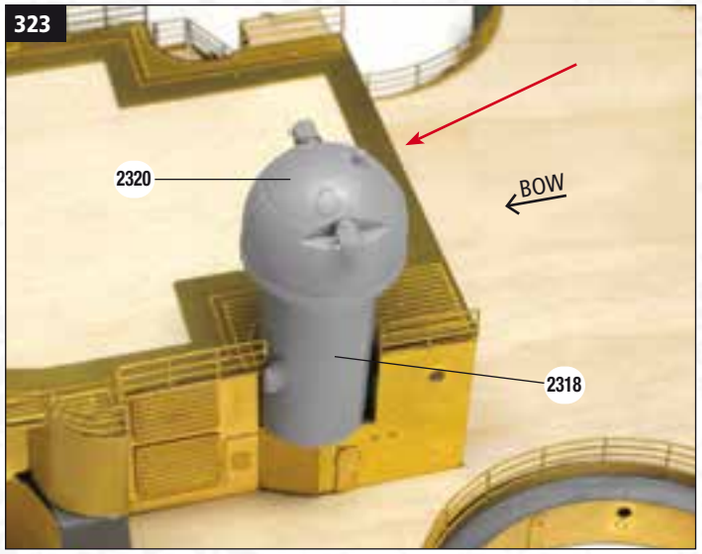

323 Hold the cylinder in position and glue cap 2319-2320 on turret 2318, placing the range finders parallel to the rear of the structure and the small dowel on the cap (red arrow) oriented towards the stern. Warning: do not glue the turret to the structure.

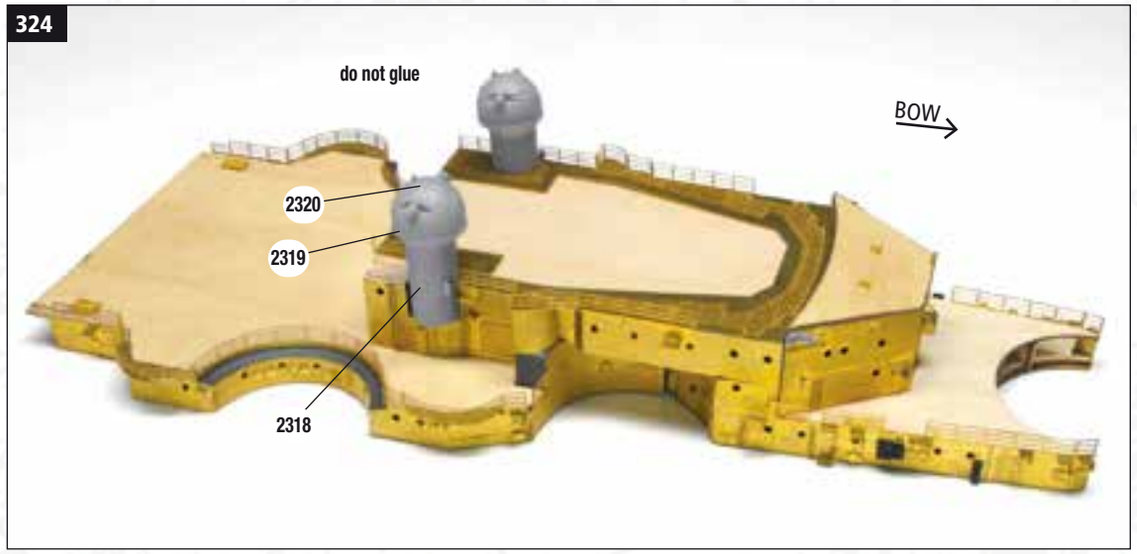

324 Repeat the same assembly procedure for the second shooting position which will be assembled on the port side of the superstructure. Use the other components which you can find on sprue P23: 2318 (x2), 2319 (x2) and 2320.

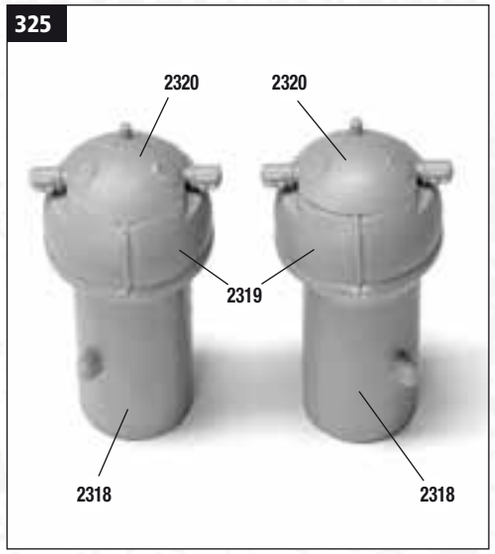

325 Remove the two prepared turrets from the model and keep them aside together with the superstructure; they will be glued later.

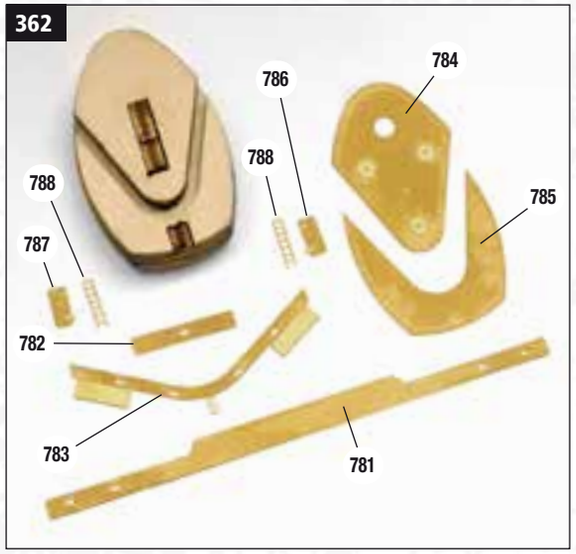

362 Now move on to setting up the front control station that you have assembled on page 53. Remove from sheet 1556 the covering walls and accessories shown in the picture.

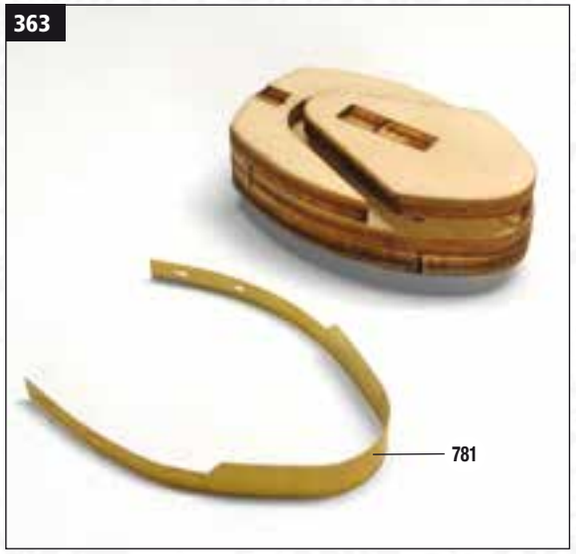

363 Take cladding 781 and shape it according to the curved profile of the station structure. Observe the next picture to find its positioning.

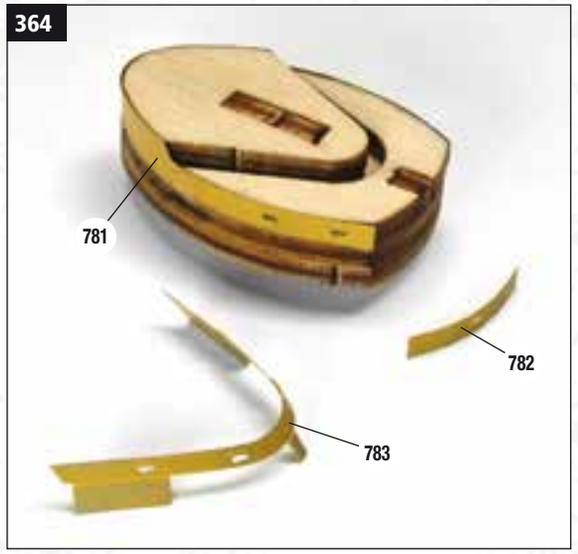

364 Glue wall 781 to the structure and bend the two walls 782 and 783 to adapt them to the front of the structure. The three side wings of piece 783 serve as spacers to correctly position the piece on the structure.

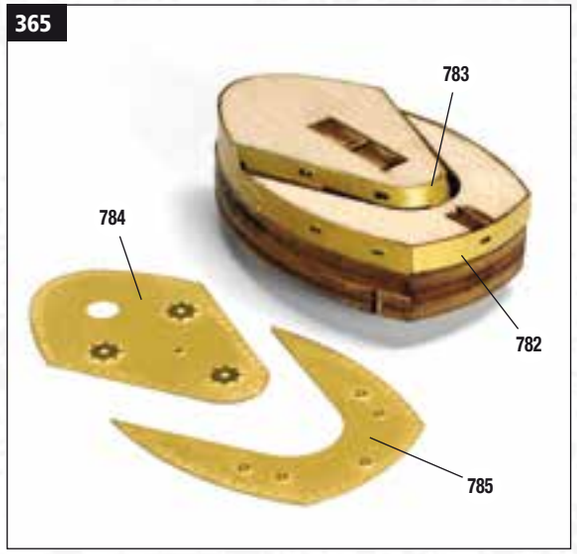

365 Glue claddings 782 and 783 to the structure as shown in the picture. Take roofs 784 and 785, which you will have to glue over the structure.

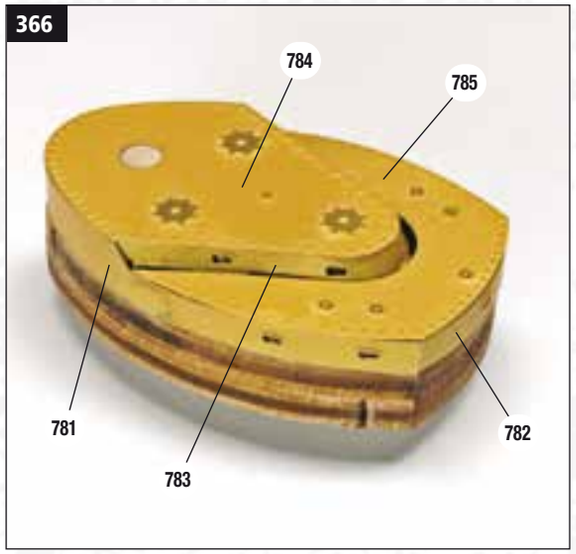

366 Position roof 784 aligned with walls 781, 783 and roof 785 aligned with walls 781, 782.

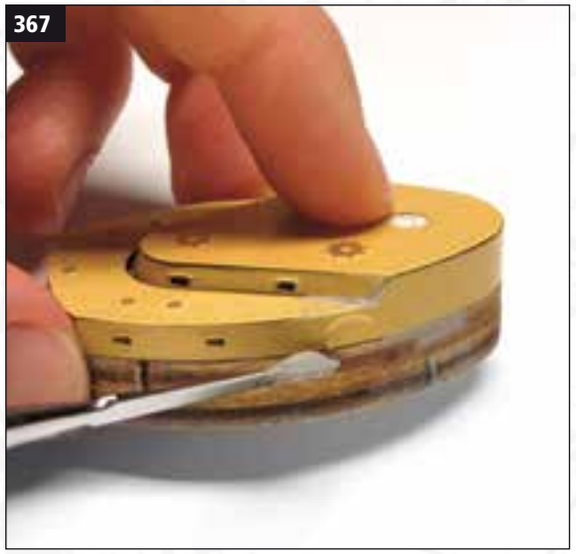

367 At this point, fill and level the cracks and imperfections of the structure with putty and sandpaper in order to level the walls.

368 Also fill the crack on the roof with putty and sand with sandpaper.

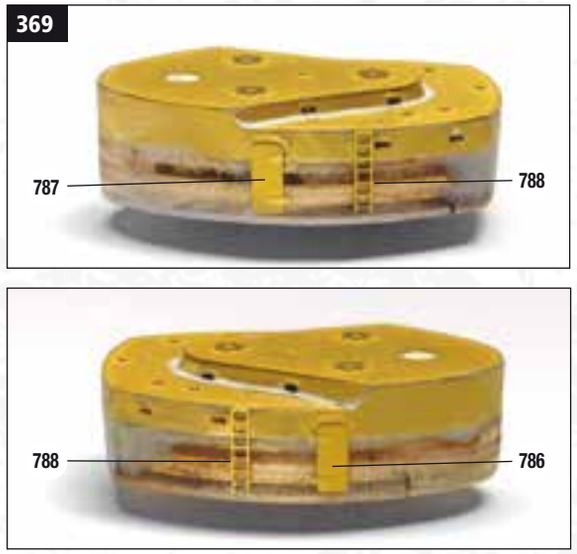

369 Take the accessories prepared in step 362 and glue them to the sides of the station walls in the position shown in the pictures.

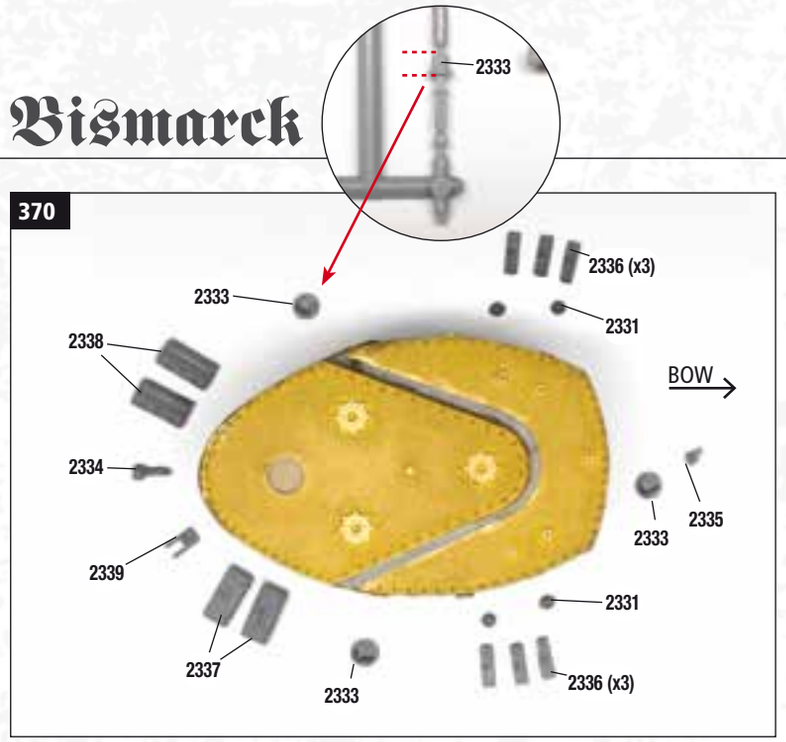

370 Now prepare the plastic components for the roof of the station. Remove the pieces from sprue P25. Separate the three searchlights 2333 which you can find on sprue P36 with a cutter (see detail).

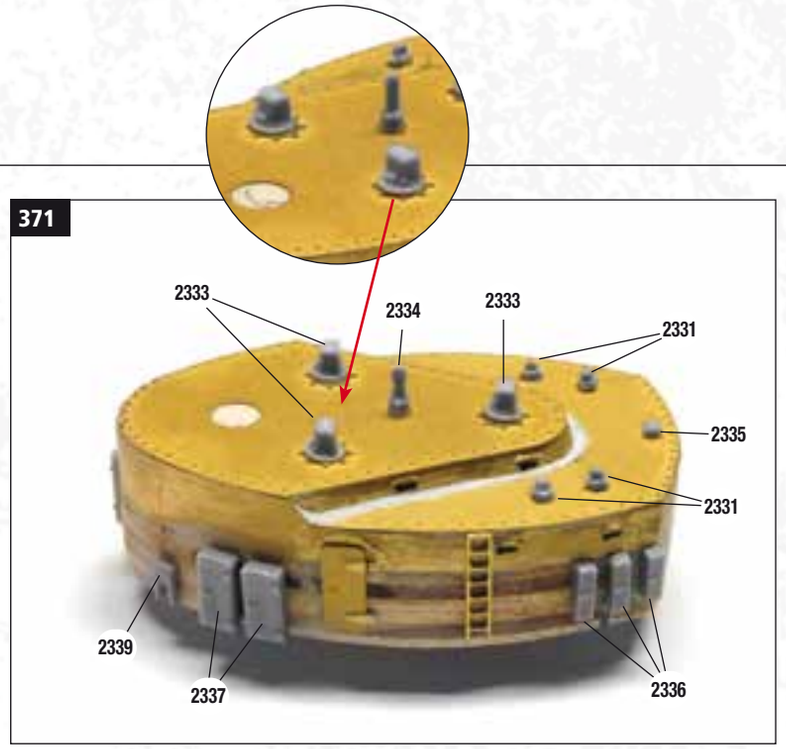

371 By consulting the picture above, glue the plastic accessories on the roof and on the wall of the control station. Be careful to correctly orient the pieces.

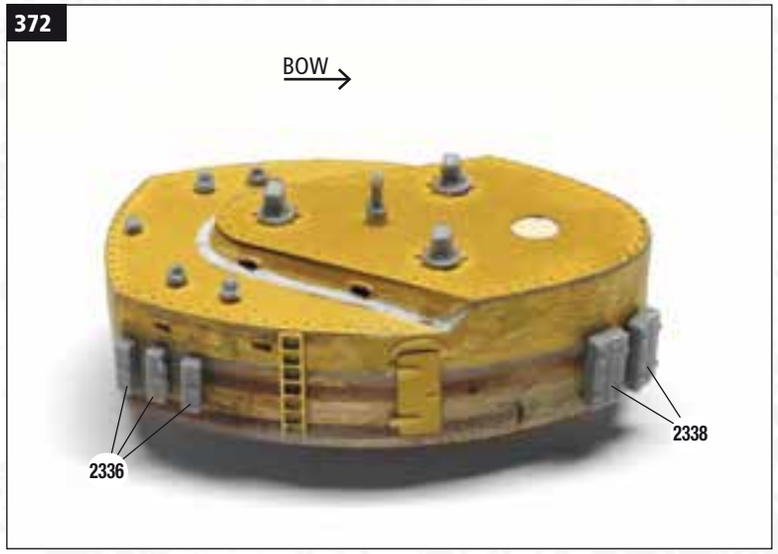

372 Rotate the structure and in the same way set up the opposite wall of the station. The station is ready, put it temporarily aside.

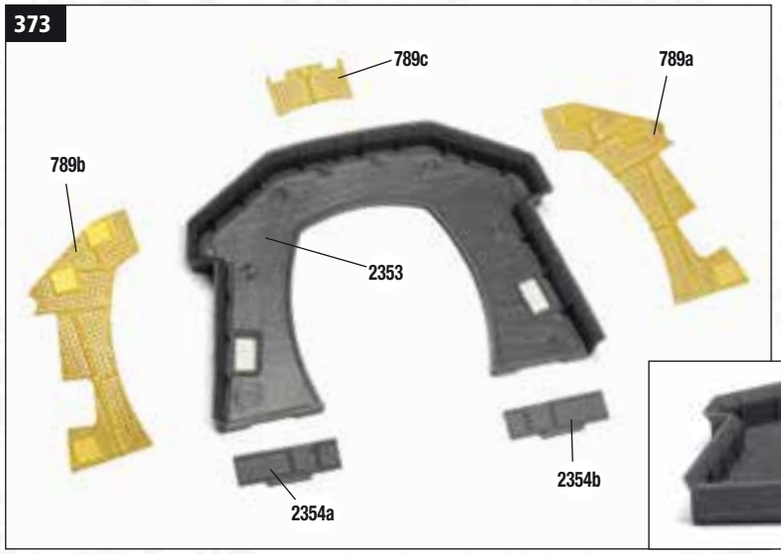

373 Now prepare the lower navigation deck with the use of parts 2353, 2354a, 2354b which you can find on sprues P45, P44 and floors 789a, 789b, 789c on sheet 1556. Lay them on your worktop oriented as shown in the picture.

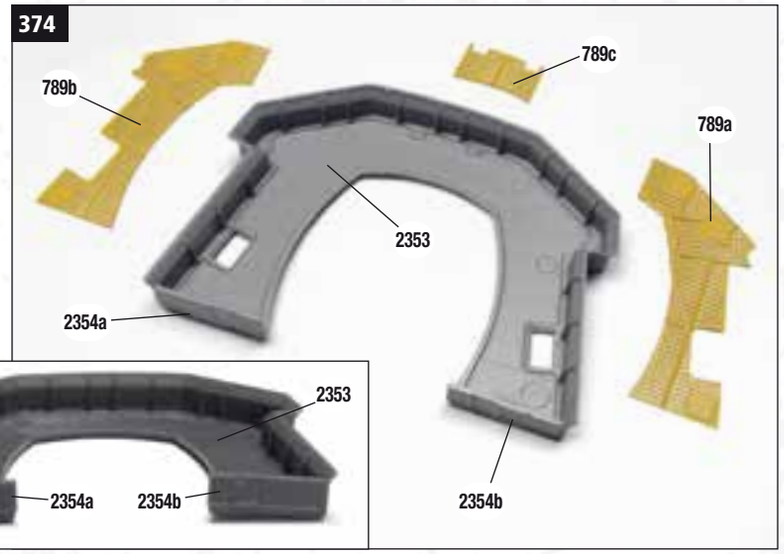

374 Glue the two walls 2354a and 2345b to deck 2353 as shown in the picture. The two vertical lines in relief on the walls must be oriented towards the inside of the deck. At this point, you will have to paint the deck, only its plastic structure, with Ral 7001 grey and the brass floors with Ral 1001 wood colour.

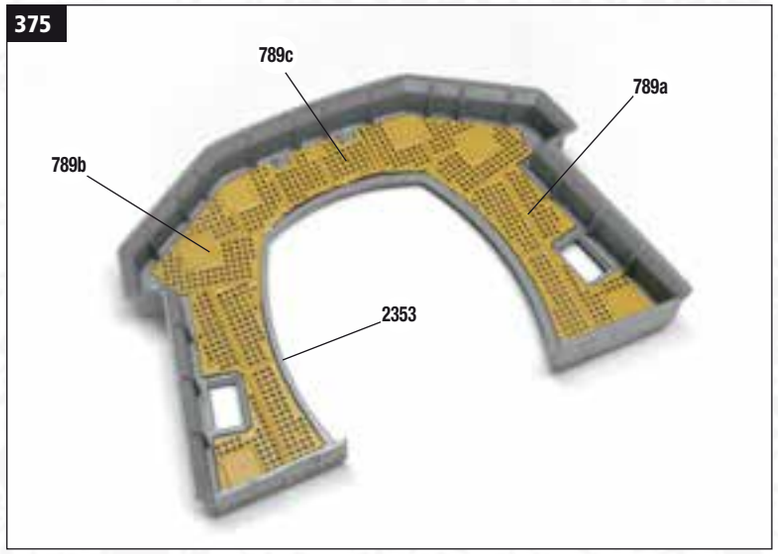

375 Once dry, glue the floors with the gratings to the deck.

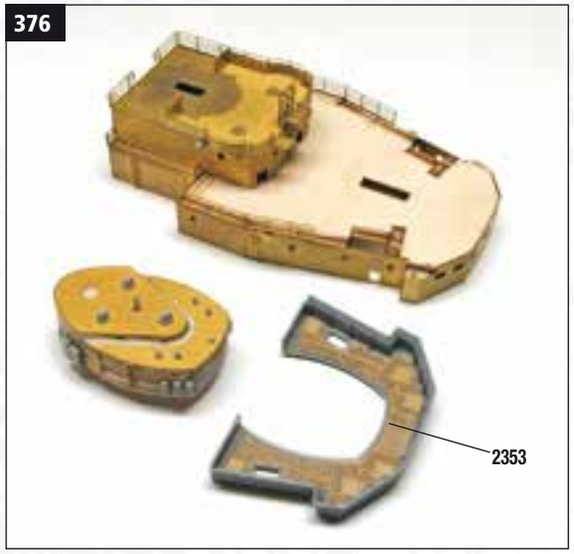

376 Take the three prepared structures: the front control station, the lower navigation deck and the bridge, lay them on your worktop oriented as shown in the picture.

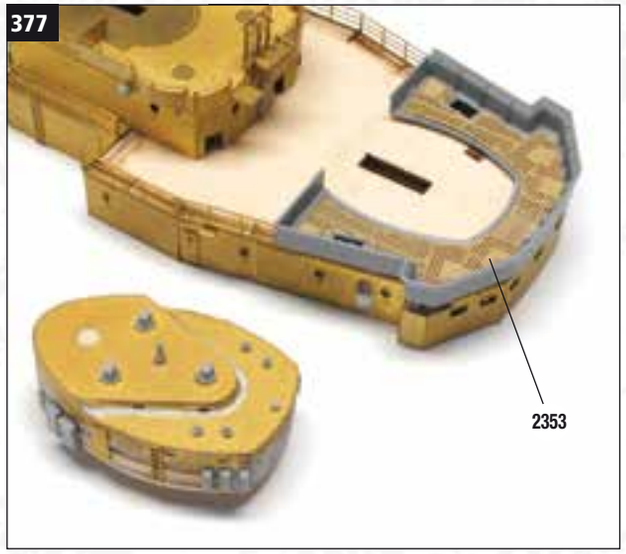

377 Perform tests without glue. Position the deck aligned with the front walls of the underlying superstructure and the side railings.

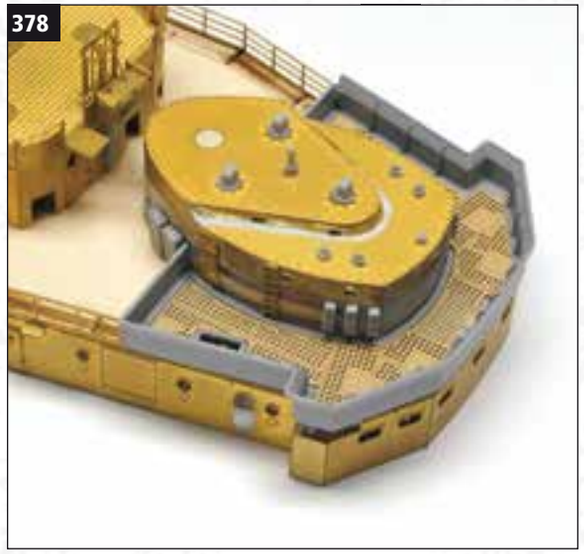

378 Always insert without gluing the control station in the central joint of the deck; it will serve you as a guide to correct the position of deck 2353.

379 We advise you not to glue the structures but only check their position before proceeding with the final painting; this will be done later. Put these elements aside.

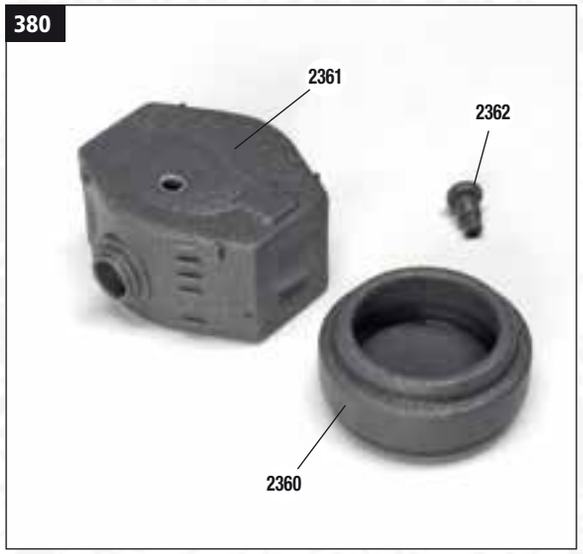

380 Remove the components of the front shooting direction turret from sprue P35 and lay them on your worktop oriented as shown in the picture above. This turret will be prepared following the next assembly steps and assembled later on the front control station.

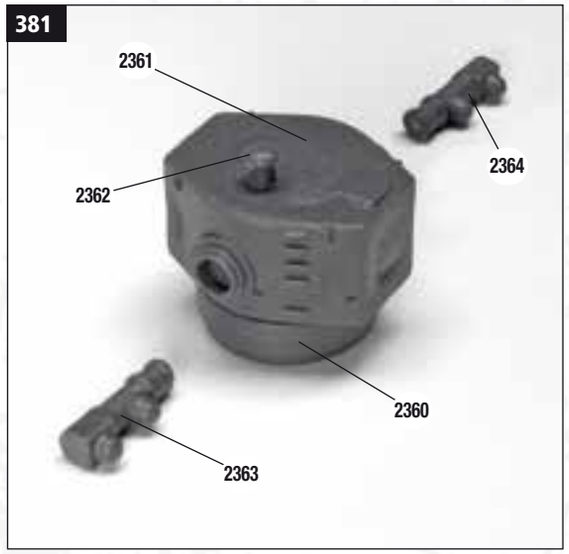

381 Join turret 2361 to base 2360 and insert piece 2362 in the hole on the roof of the turret; then glue.

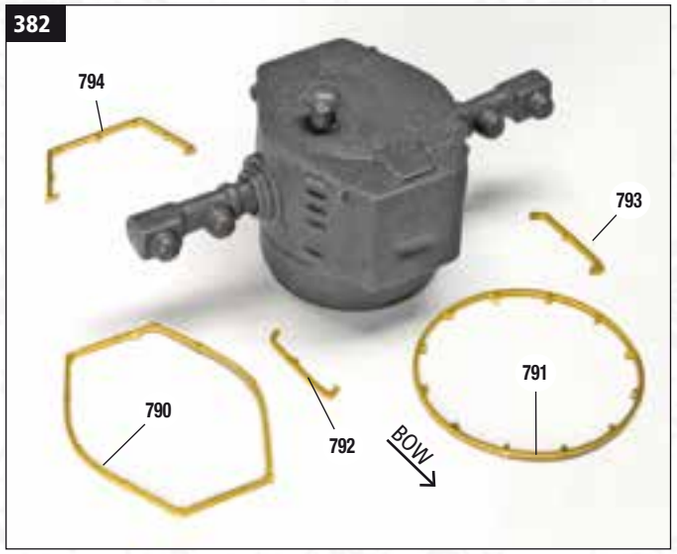

382 Glue the two range finders 2363 and 2364 to the sides of the turret with the protruding lenses oriented towards the bow. Prepare the accessories shown in the picture for the preparation of the turret which you can find on sheet 1557.

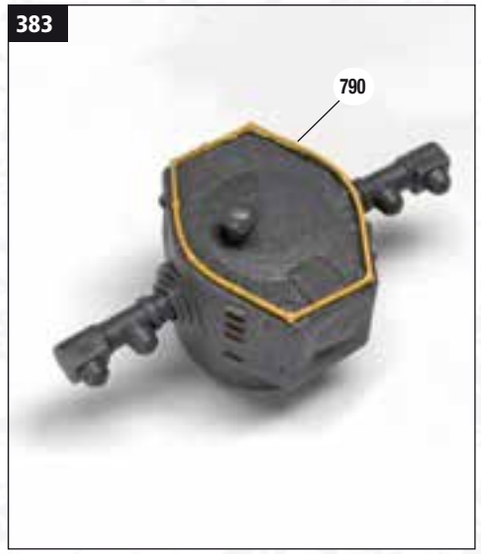

383 Glue profile 790 along the edge of the turret roof.

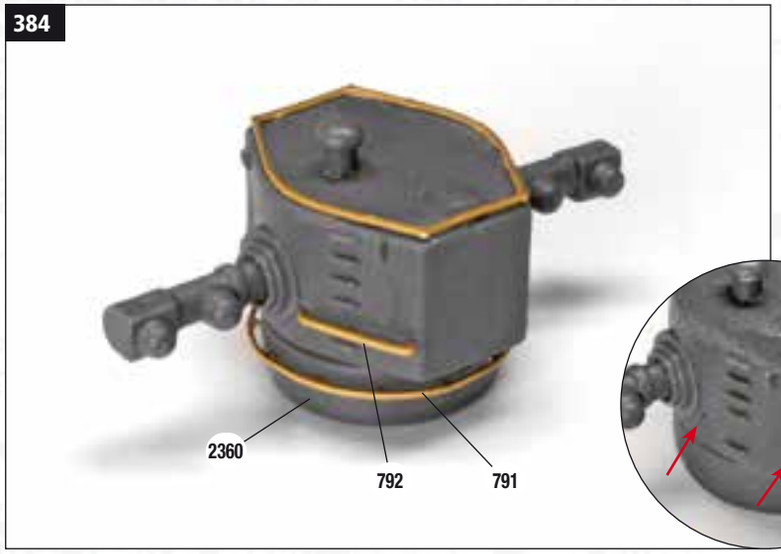

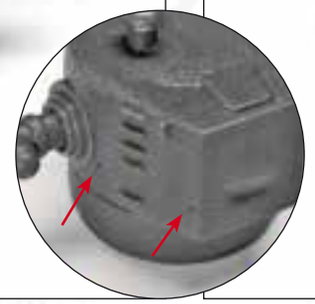

384 Insert and glue ring 791 in base 2360, insert the ends of profile 792 in the small signs engraved on the side wall of the turret as shown by the red arrows in the detail.

385 In the same way, glue profile 793 on the other side of the turret symmetrically.

386 Glue profile 794 to the rear of the turret.

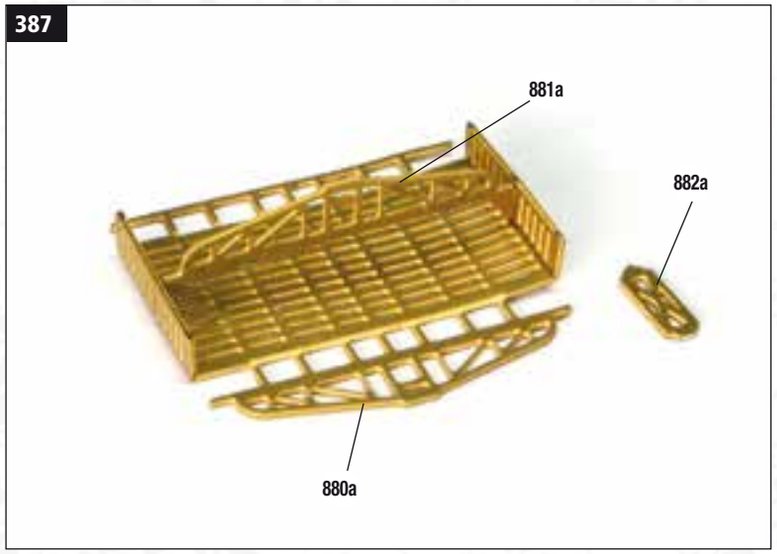

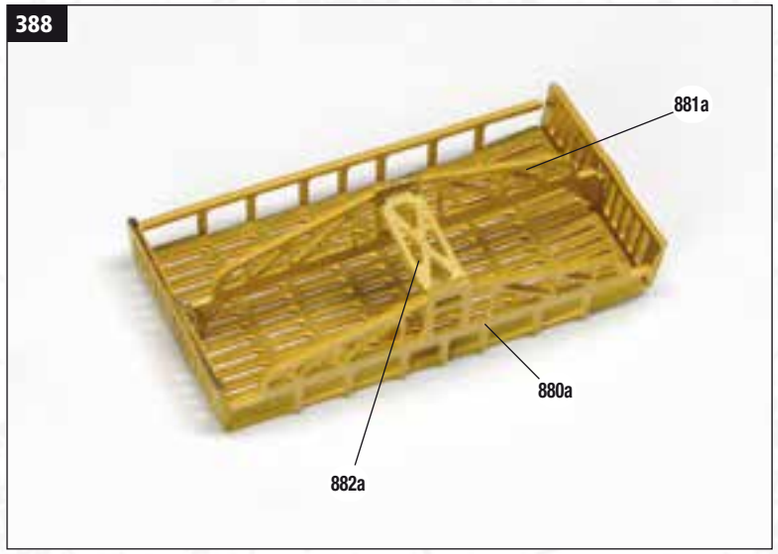

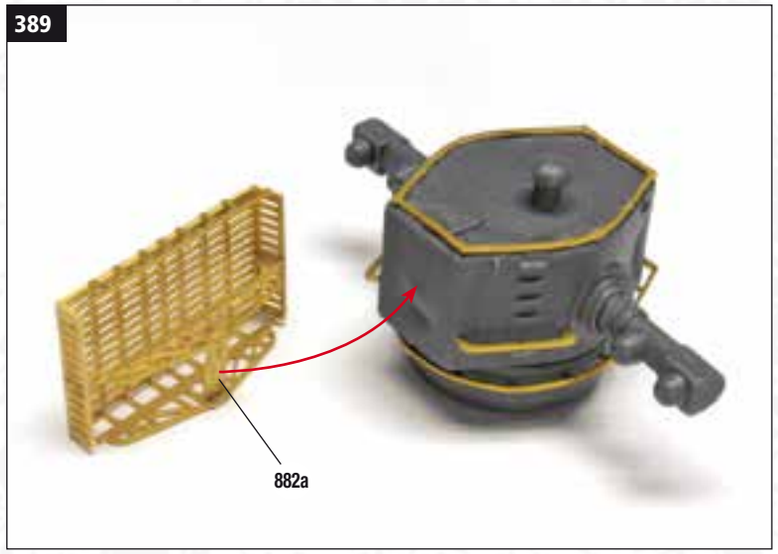

387 Now move to the photo-etched pieces (sheet 1557) shown in the picture, which you will need to prepare the radar device to be assembled on the front wall of the newly assembled bow turret. Fold one of the two short sides of grating 880a upwards, insert one end of piece 881a into the sixth slot of the lattice and glue. Bend the other short side by inserting the other end of piece 881a into the sixth slot; then glue.

388 Fold the long sides of grating 880a upwards and insert piece 882a into the central joints of crossbars 880a and 881a as shown in the picture.

389 The picture shows the turret with its newly assembled radar device. Correctly orient the radar by placing the straight and long side of grating 880 upwards; plate 882a will be the point of attachment to the front wall of the turret (red arrow). Keep the two structures aside without gluing them, they will first be painted, then glued together, finally assembled on the front control station.

390

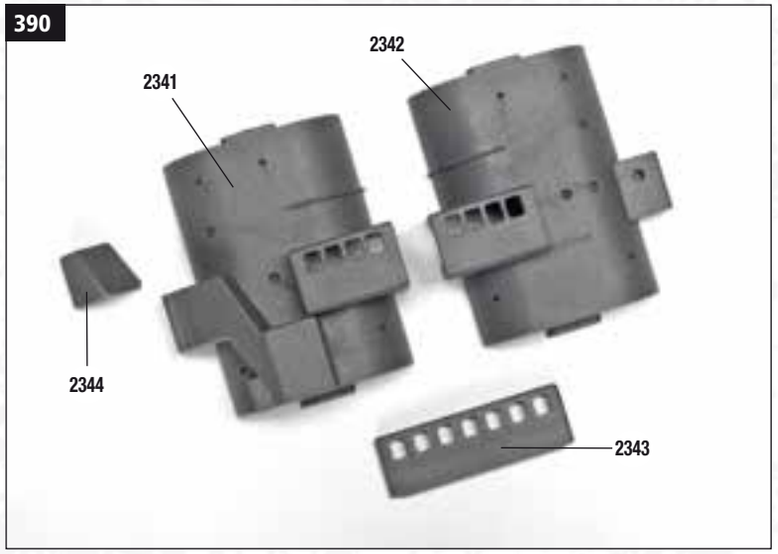

390 Take sprue P40 and remove the pieces shown in the picture above; they will be used for the assembly of the tower structure which will be assembled on the bow superstructure.

391

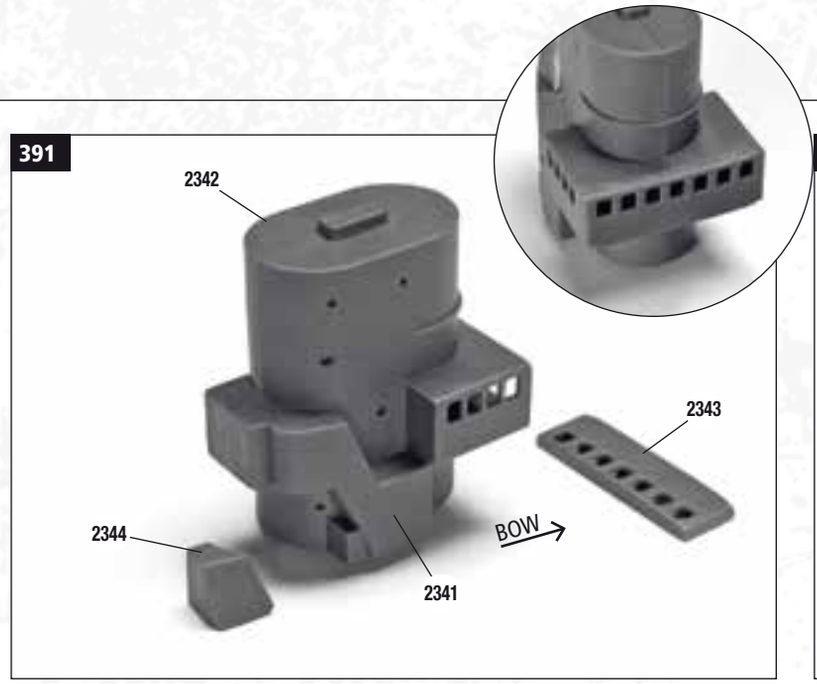

391 Lay the two halves of tower 2341 and 2342 on your worktop, then couple them without glue. After verifying that the two parts coincide perfectly, fix them definitively with superglue. Smooth at the joints with sandpaper. Close the opening on the front of the tower with window 2343 and glue (see detail above).

392

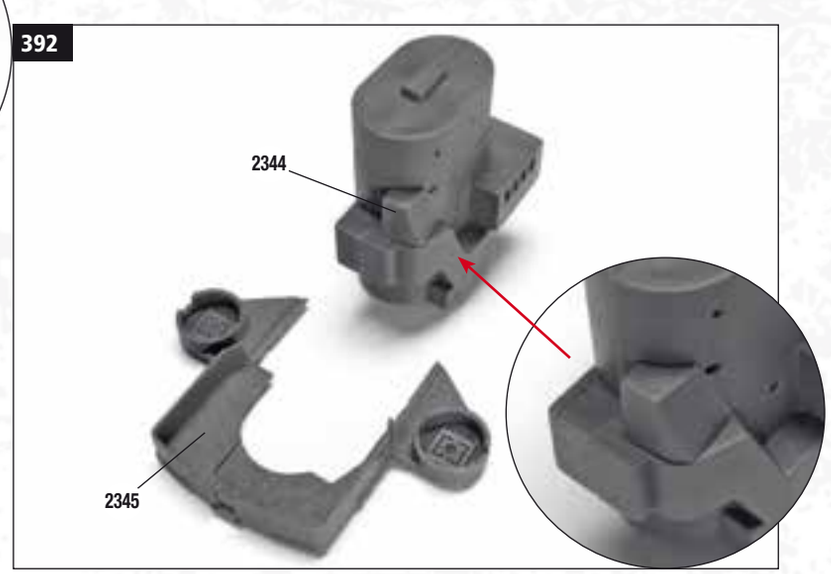

392 Glue piece 2344 on the back of the tower in the position highlighted in the detail. Take plastic piece 2345 of the admiral's bridge (sprue P41) which will be glued to the tower.

393

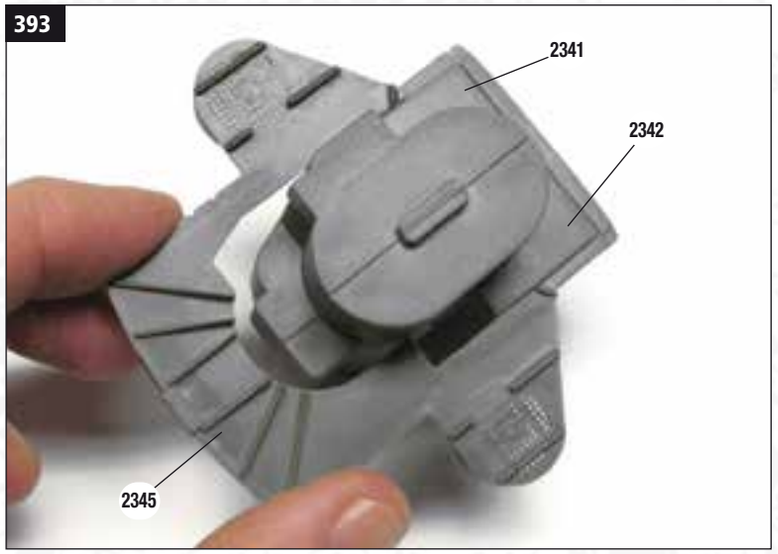

393 To find the correct position of bridge 2345, observe the picture above which shows the lateral protrusions placed on the lower part of the tower; they determine the position of bridge 2345.

394

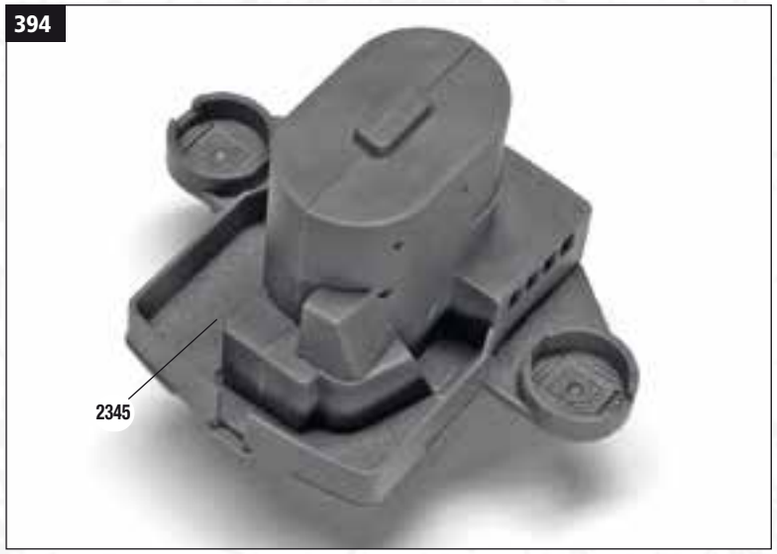

394 Once the correct position has been identified, definitively glue the bridge to the tower.

395

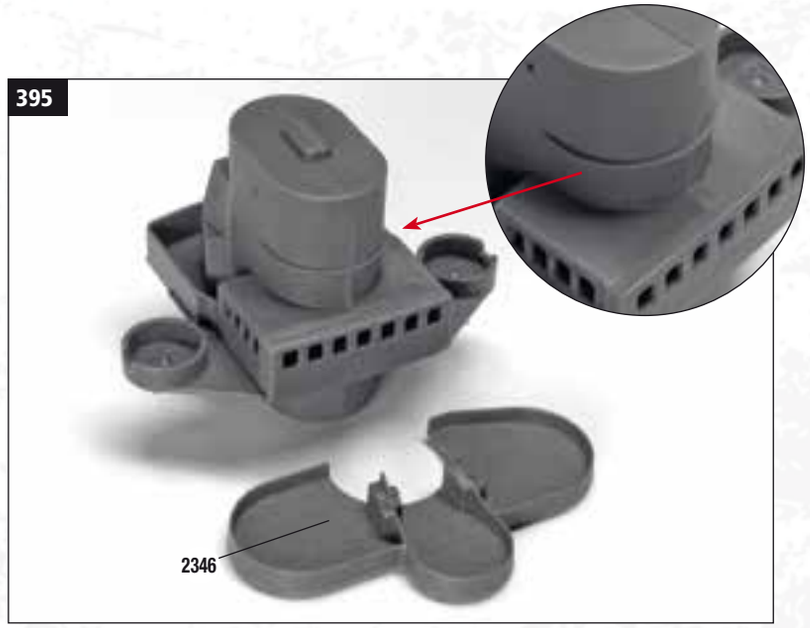

395 Take plastic component 2346, the searchlight deck (sprue P41) which will be glued on the front relief of the tower (red arrow). Smooth any imperfection with sandpaper.

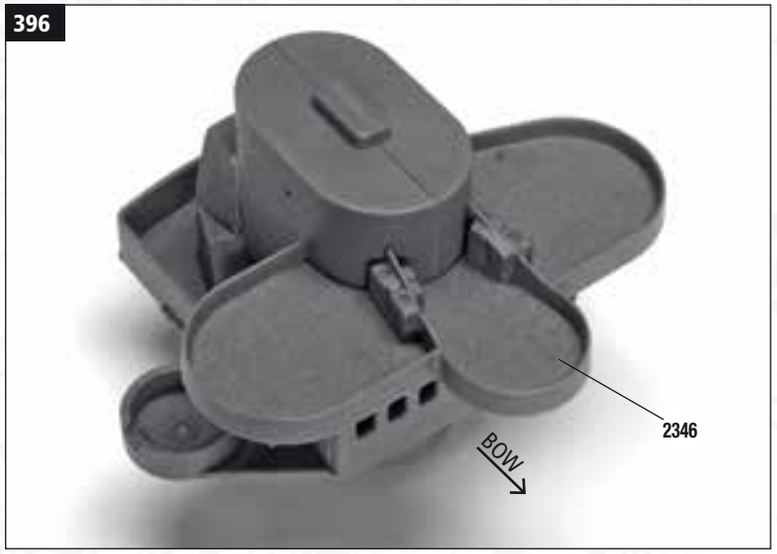

396 Then glue deck 2346 to the tower oriented as shown in the picture above.

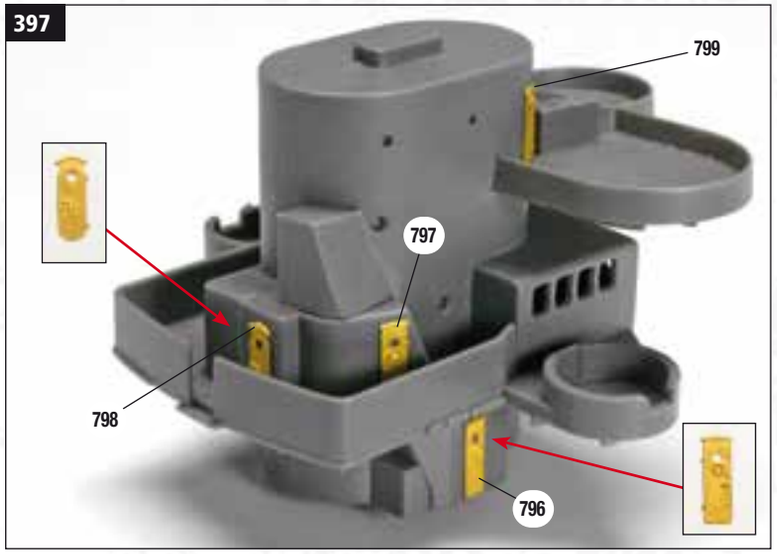

397 Now remove the seven doors from 796 to 802 from sheet 1557, which will be glued to the tower. Glue doors 796, 797, 798 to the points indicated in the picture, taking care not to confuse the pieces.

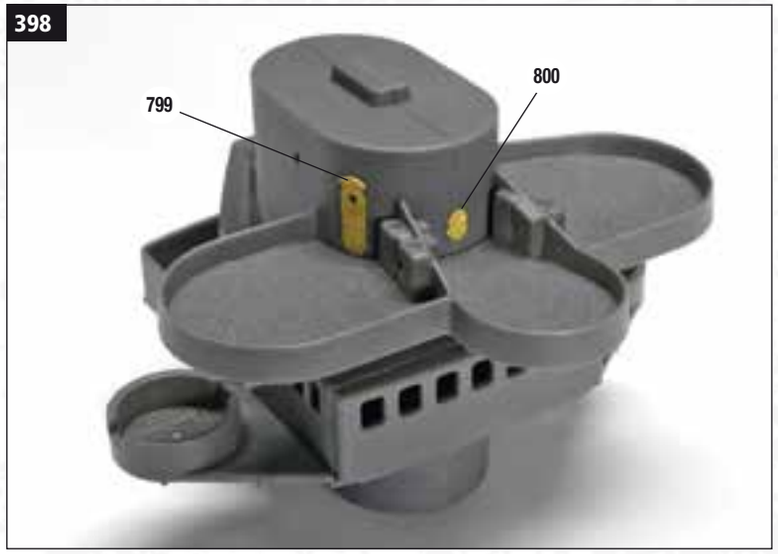

398 Move to the front wall of the tower and glue door 799 and hatch 800 in the position shown.

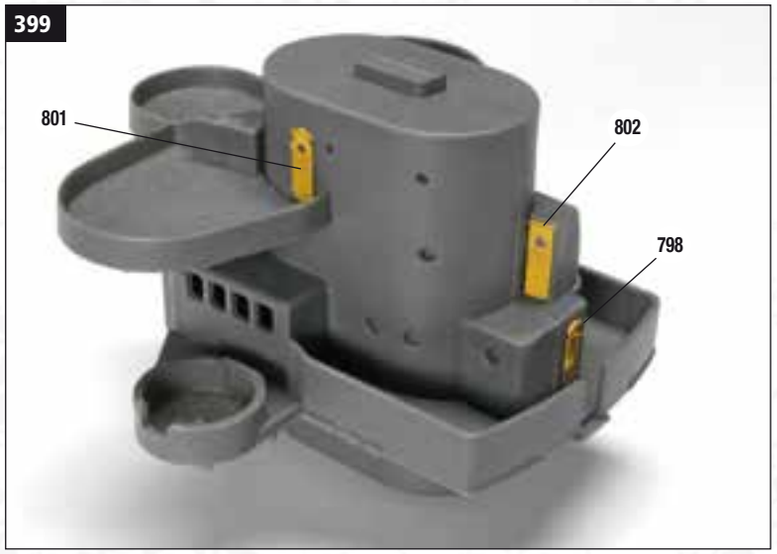

399 Proceed in the same way with doors 801 and 802. The photo also shows door 798 glued in step 397.

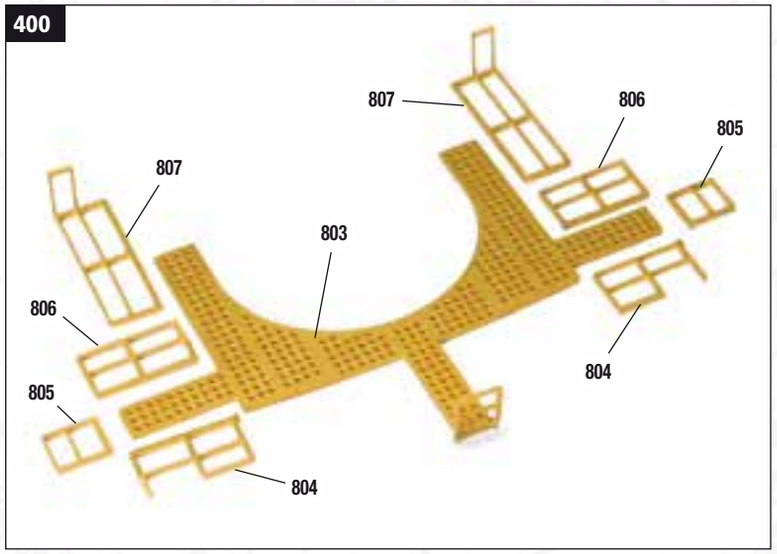

400 Now prepare the platform with gangway 803, with the railings from 804 to 807 which you can find on sheet 1557 and which once completed will be glued to the tower. Raise the ends of railings 807 (x2) and gangway 803 to 90°.

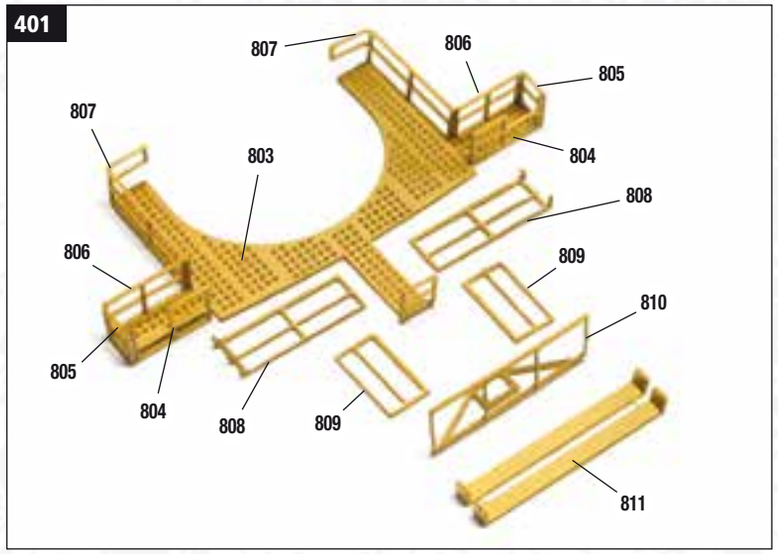

401 Glue the railings on the external profile of platform 803 in the position shown in the picture and prepare the other pieces from 808 to 811. Lift the ends of pieces 808 (x2), 811 and 810 upwards as shown in the picture.

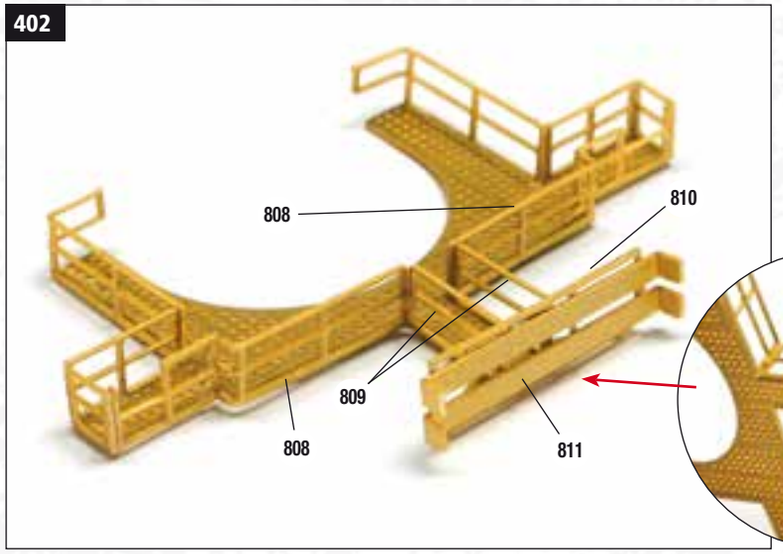

402 Glue railings 808 (x2), 809 (x2) and railing 810 aligned in the centre and under the platform gangway (see detail). The front part must serve as support for piece 811; glue the latter to the centre.
From this moment, we will indicate the resulting structure of the platform with number 803.

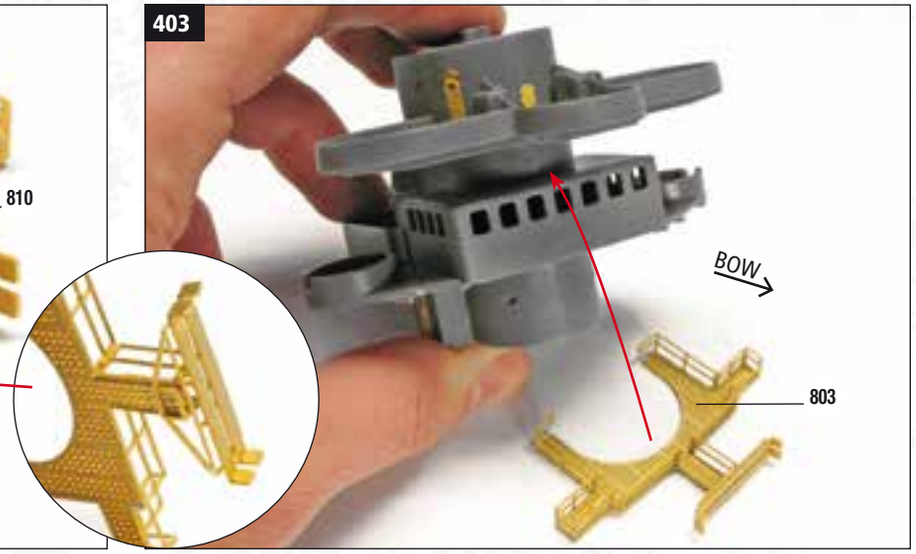

403 Now that the platform is ready, you can glue it to the tower between the admiral's bridge and the searchlight deck.

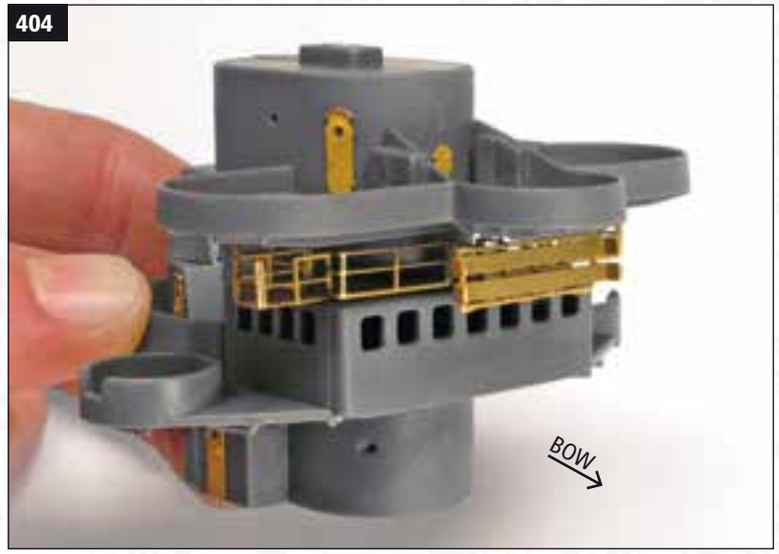

404 Observe the picture to correctly orient the pieces; then glue.

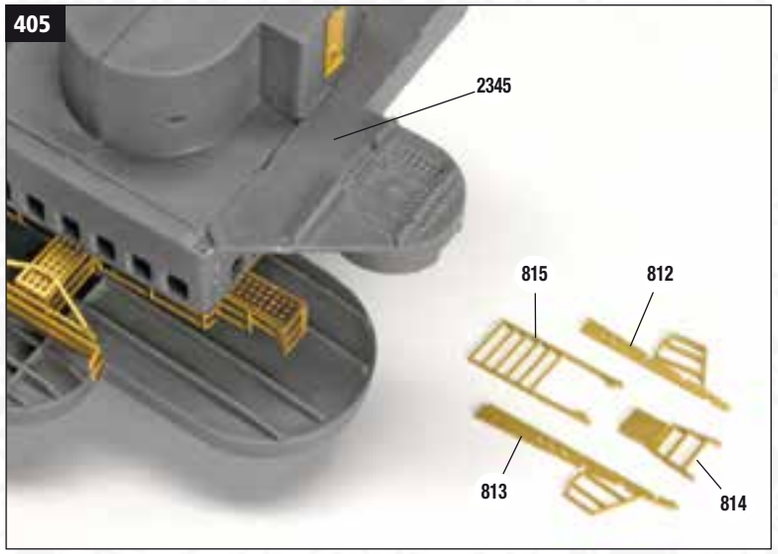

405 Now prepare the two moveable ladders which will be placed under the lateral protruding platforms of the admiral's bridge. Prepare the photo-etched pieces from 812 to 815 (sheet 1557) of the moveable ladder of the bridge on the starboard side.

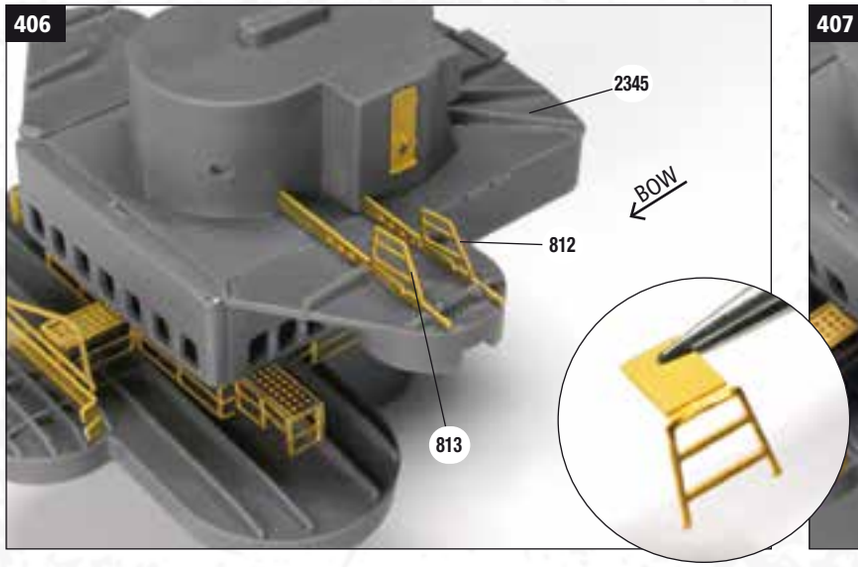

406 Fasten the two crossbars 813 and 812 in the joints of the lower part of the platform by placing the shorter crossbar (812) towards the stern.

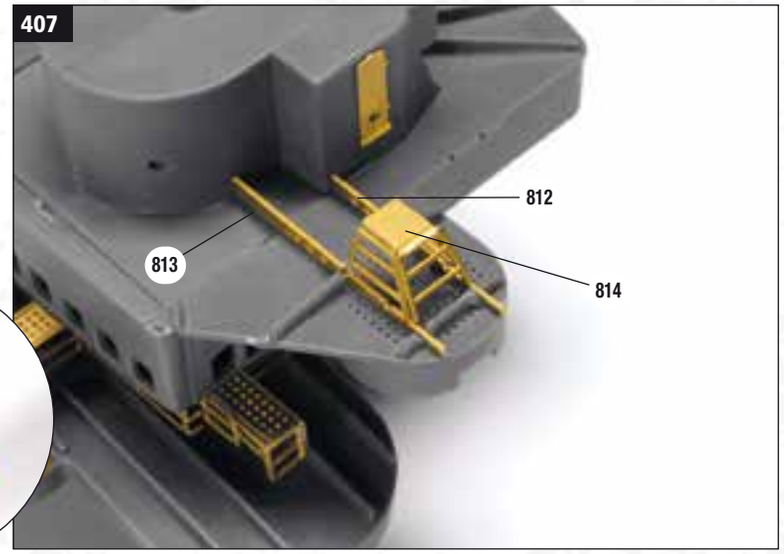

407 Slightly close the sides of the two crossbars inwards, just enough to receive piece 814, which can also be bended and glued in position as shown in the picture and the detail.

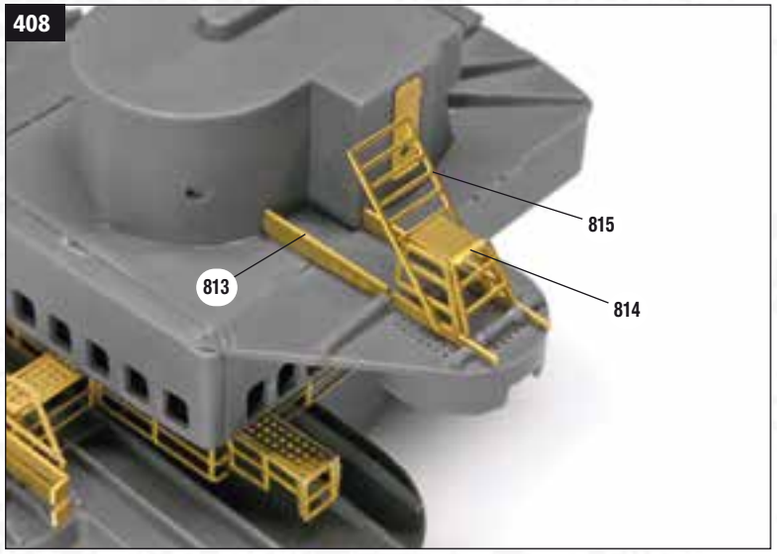

408 Complete with ladder 815, which must be glued inclined towards the inside of the structure. The starboard side ladder is complete.

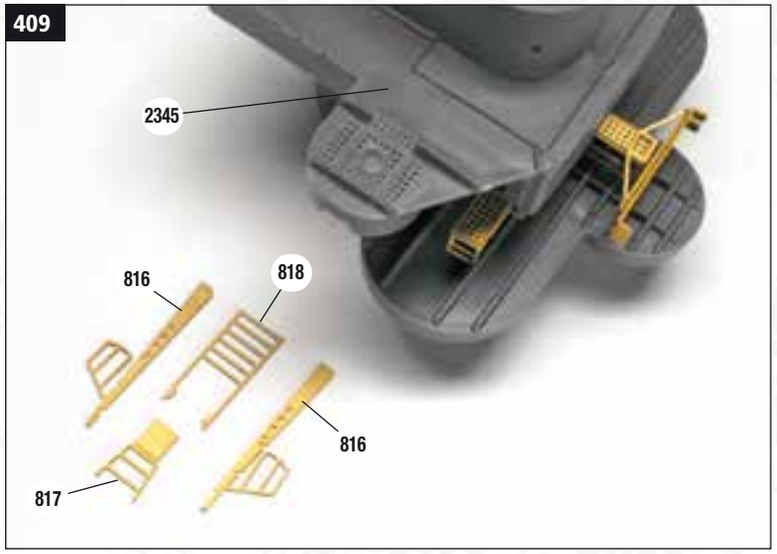

409 Move under the other circular platform of the admiral's bridge and prepare the pieces from 816 to 818 (sheet 1557) for the assembly of the ladder on the port side.

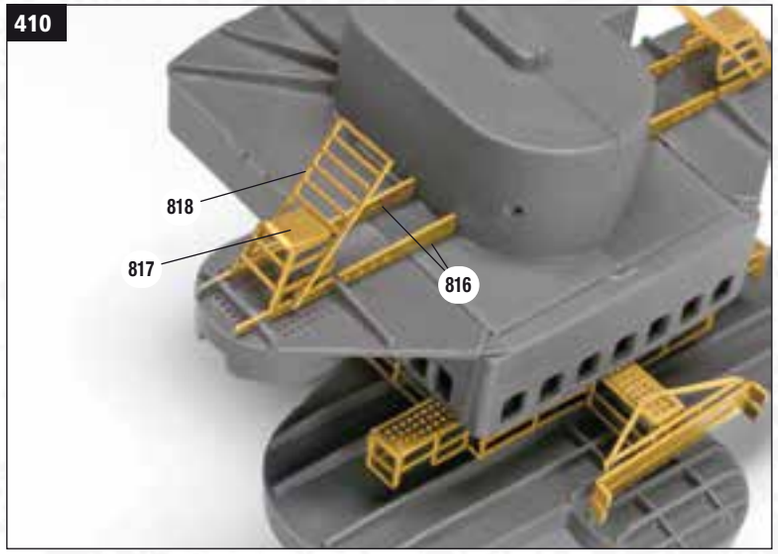

410 Replicate the assembly on the port side of the admiral's bridge symmetrically.

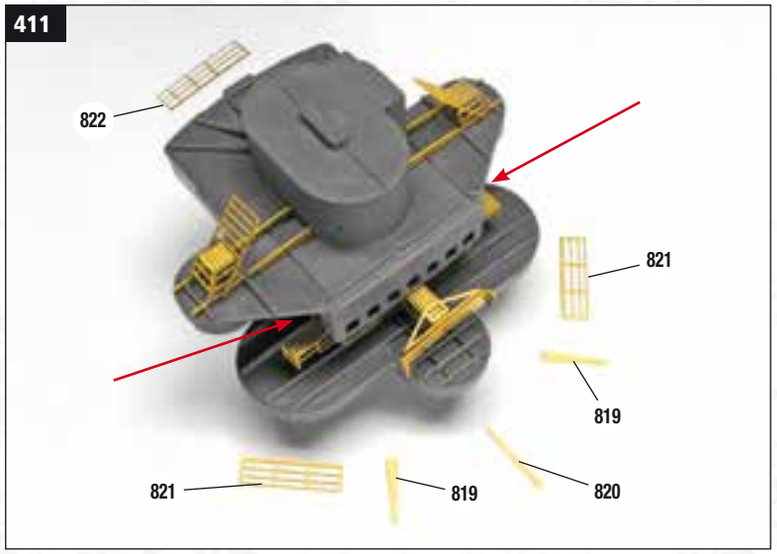

411 With the turret upside down, move under the front of the admiral's bridge and prepare brackets 819 (x2), cable tension rod 820 and three railings 821 (x2) and 822 (sheet 1557).

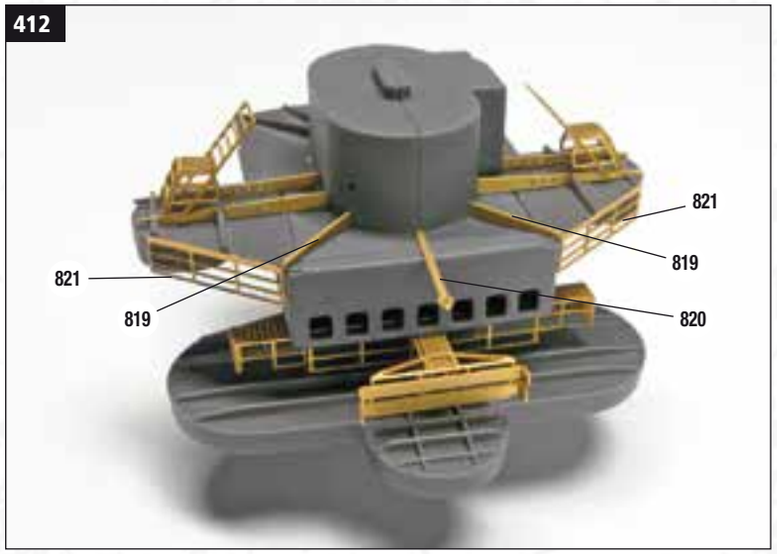

412 Glue the two brackets 819 inclined outwards on the protrusions under the bridge (see red arrows, previous step) and rod 820 in the centre with the eyelet placed outwards. Take the two 821 railings and glue them along the inclined edges of the admiral's bridge oriented as shown in the picture. Place the thicker edge of the railing against the bent edge of the plank.

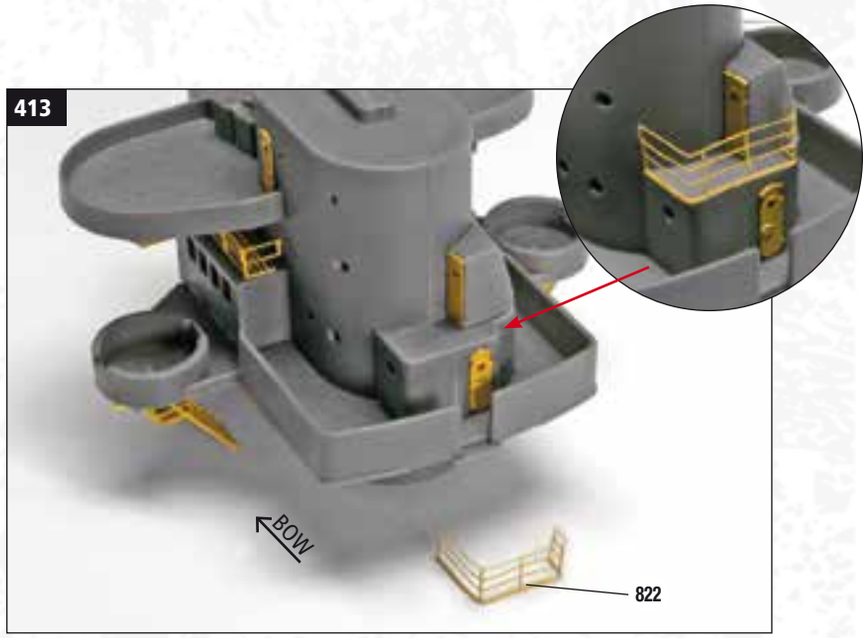

413 Turn the turret over to its correct position and bend railing 822 on three sides in order to adapt it to the edge indicated by the red arrow on the back of the turret. Observe the picture in detail and glue railing 822 in place.

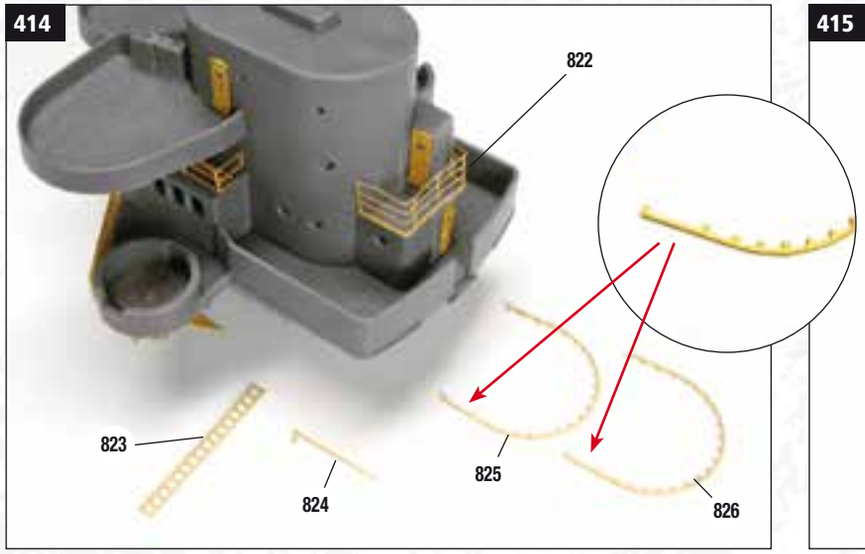

414 Prepare the accessories shown in the picture, which you can find on sheet 1557; they will be used to set up the walls of the tower. Arrange the two profiles 825 and 826 with the end without the tooth (see detail) facing the port side of the structure.

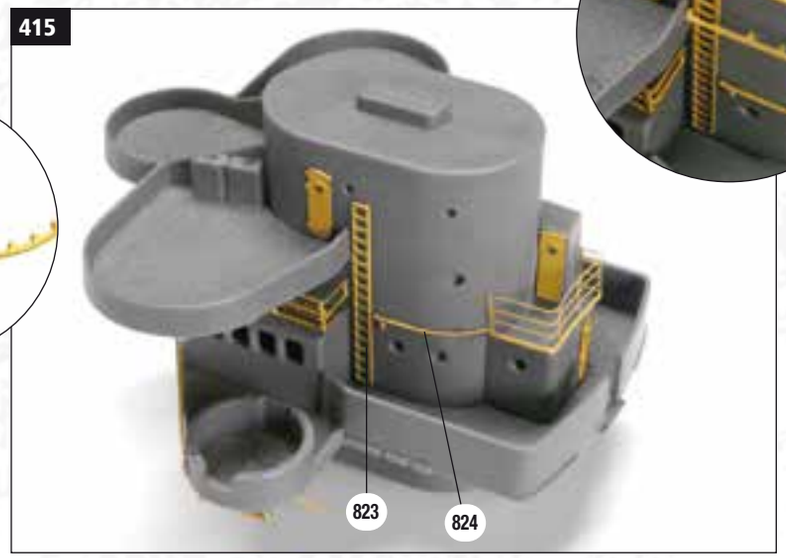

415 Glue ladder 823 and profile 824 on the left wall of the tower as shown in the picture. Model profile 824 first according to the curve of the tower.

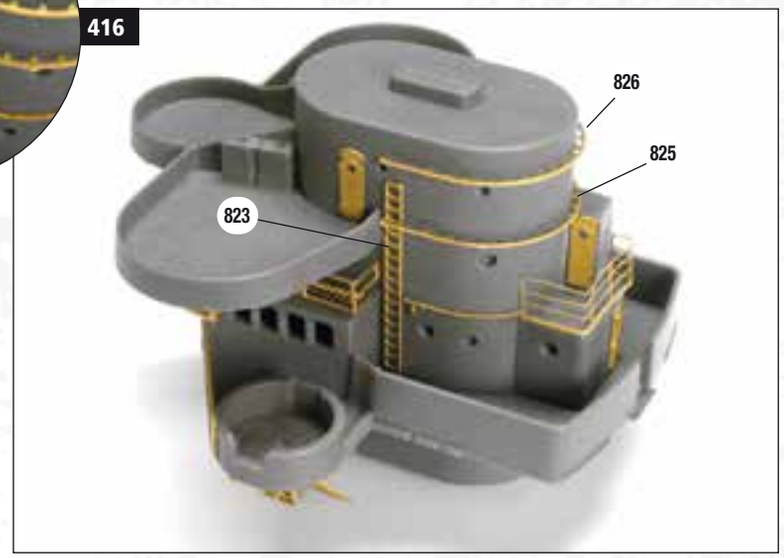

416 Glue the two profiles 825 and 826 at regular heights along the rear wall of the tower. The missing tooth on profile 825 receives ladder 823.

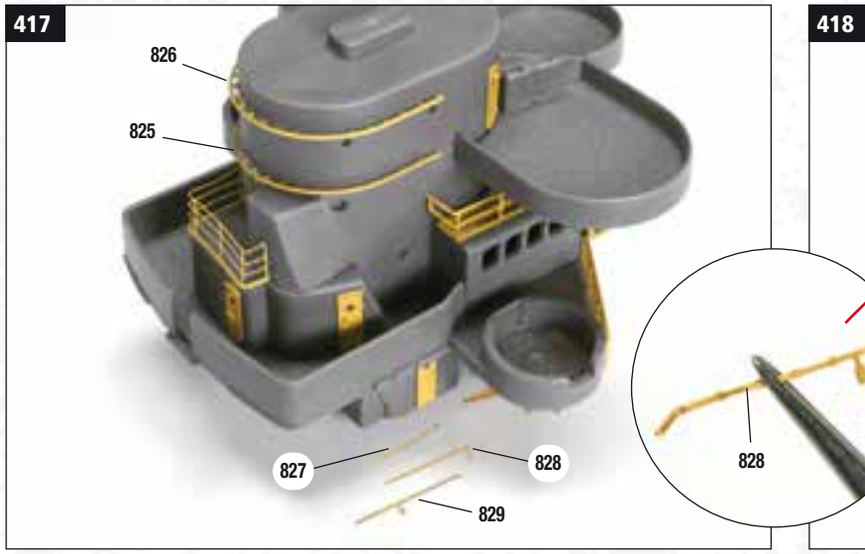

417 The picture shows the view of the two profiles 825 and 826 on the other side of the tower. Prepare the other pieces 827, 828, 829 (sheet 1557) to continue with the preparation.

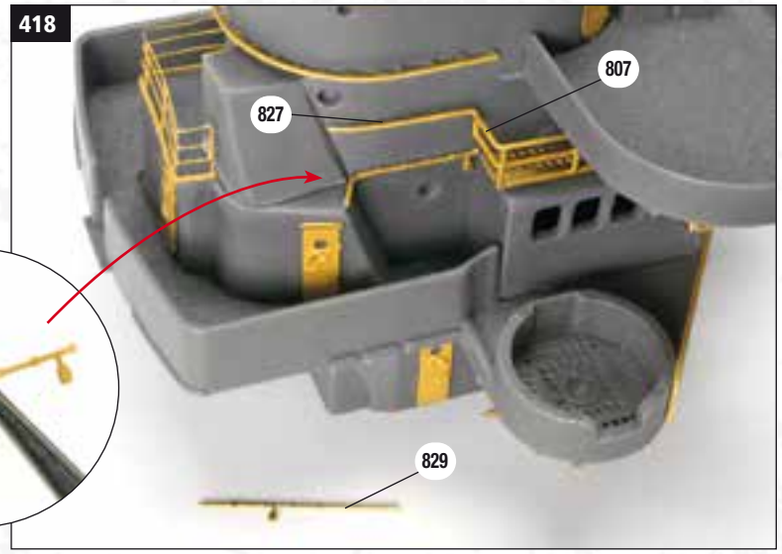

418 Glue profile 827 aligned with railing 807 of the gangway, bend and glue profile 828 so that it follows the inclined edge of the tower wall as shown in the picture.

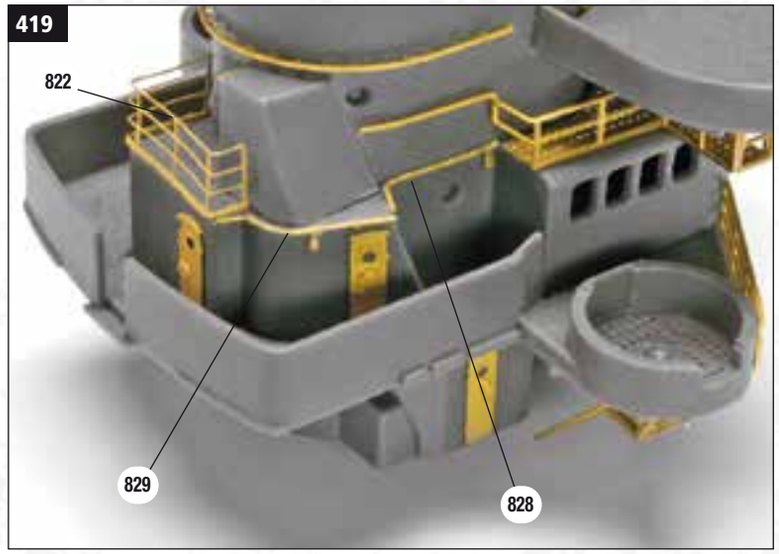

419 Continue along the rounded edge of the tower wall and cover with profile 829 up to railing 822.

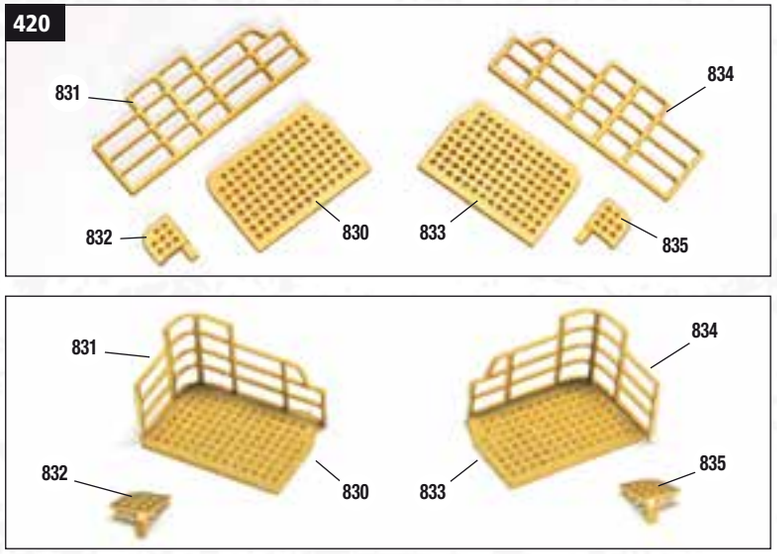

420 Continue with the first two photo-etched platforms, which will be placed on the sides of the admiral's bridge. You will need the pieces from 830 to 834, which you can find on sheet 1557. Fold and glue railings 831 and 834 on the two sides of bottom plates 830 and 833. Bend base legs 832 and 835 to 90°.

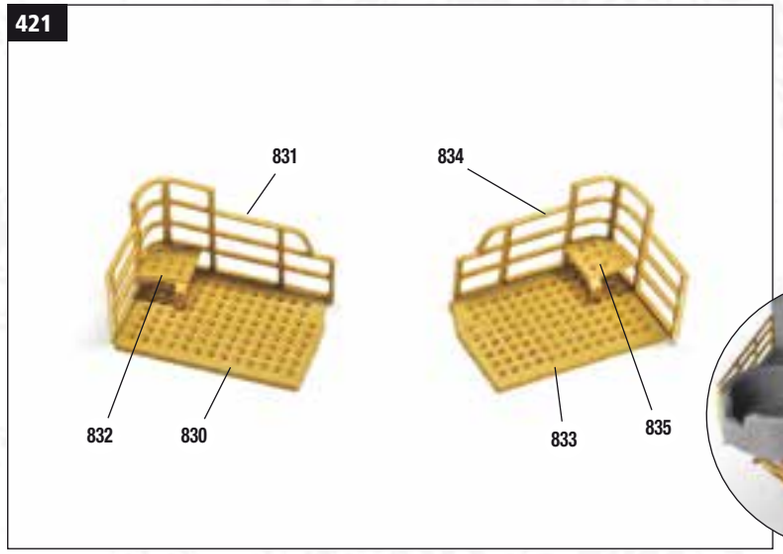

421 Glue the bases in the corner of the platform oriented as shown in the picture. We will indicate the platforms with numbers 830 and 833.

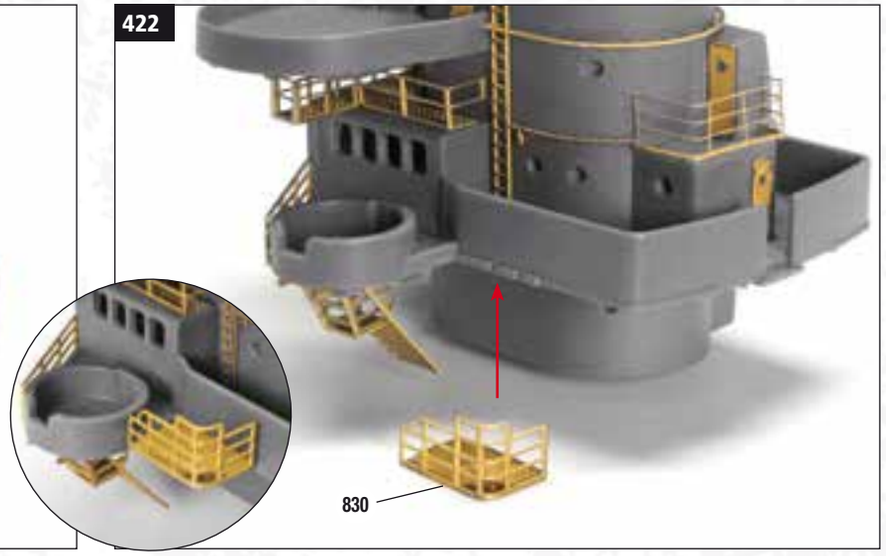

422 On the external side of the admiral's bridge, locate the support reliefs of platform 830, shown by the red arrow; then glue.

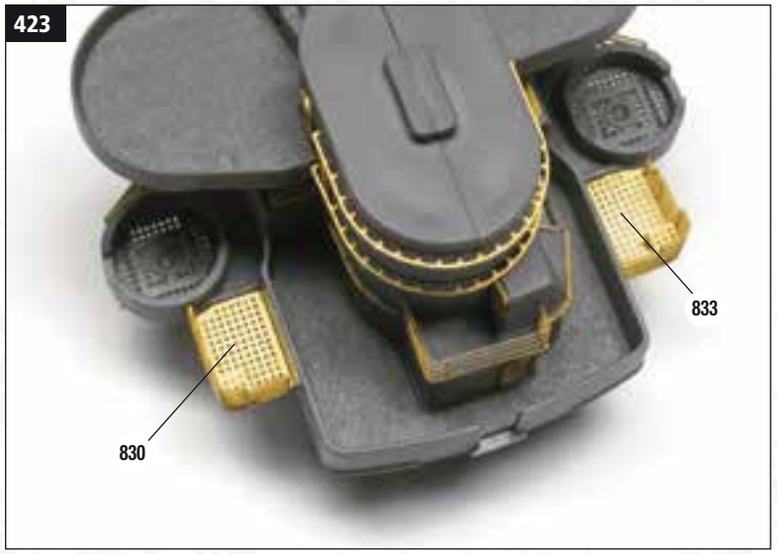

423 Move to the other side of the tower and glue the other platform 833. The picture shows a top view of the two platforms correctly glued to the sides of the admiral's bridge.

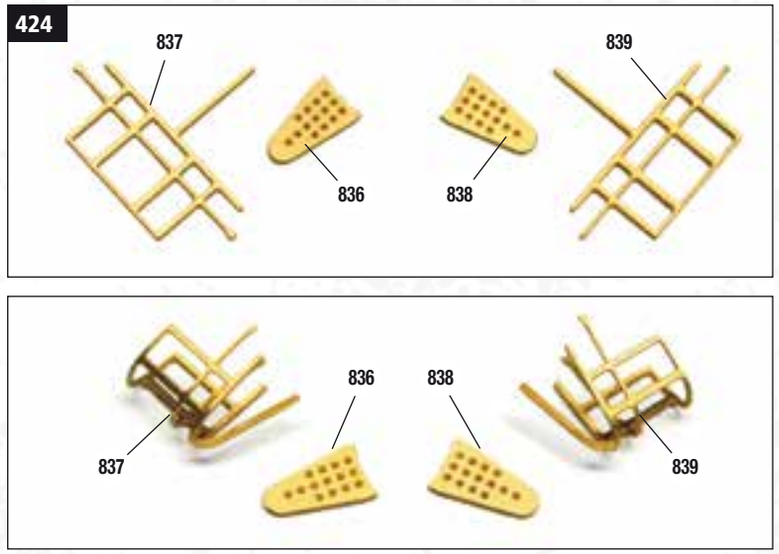

424 Prepare two other smaller platforms with the use of pieces 836, 837, 838, 839, which you can find on sheet 1557. Curve the two railings 837 and 839 according to the rounded profile of the respective plates 836 and 838 and bend the lower rod towards the inside of the platform. Use a small rod to facilitate the bending passage of the pieces.

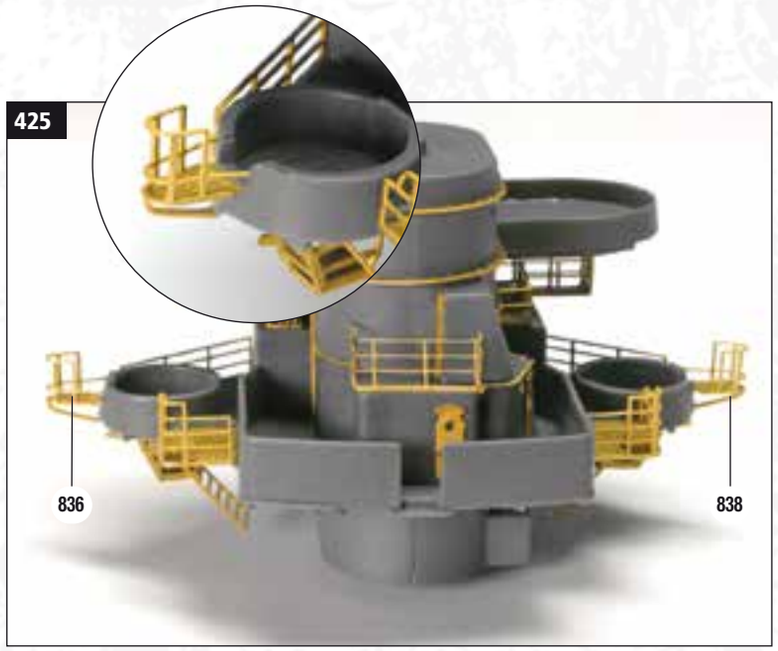

425 Glue the railings to the plates and fix the two platforms, which we will call 836 and 838, near the external openings placed on the circular platforms on the sides of the admiral's bridge.

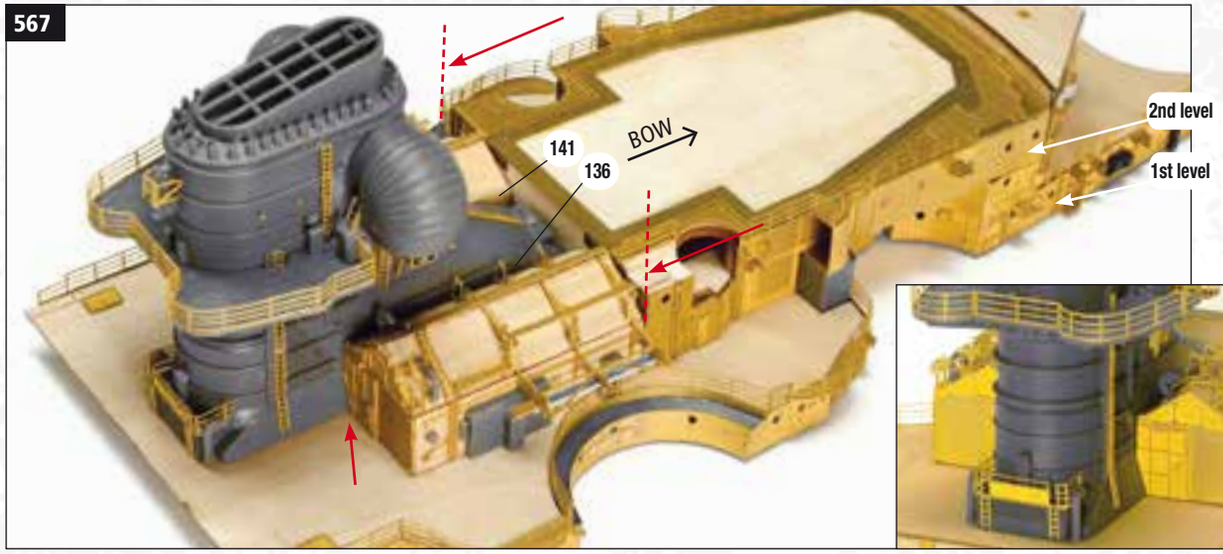

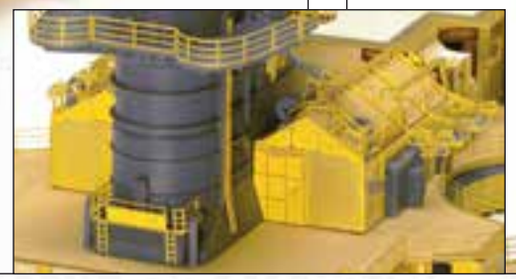

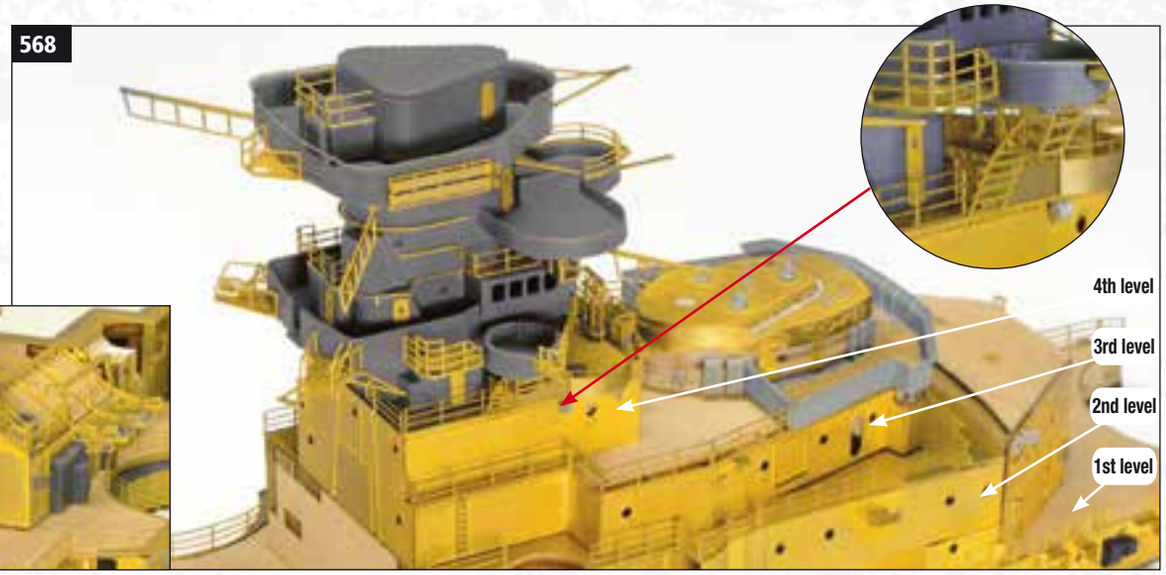

567 Now that the two hangars and the funnel are ready, you can try them without glue on the lower deck of the bow superstructure. Align the funnel in the centre of the deck as shown in the picture and place the two hangars against the sides. At the sides at the base of the funnel, there are joints to accommodate the internal wall of the two hangars (see red arrow); 136 for the starboard structure and 141 for the port one. See also the detailed picture which shows a view from the stern of the funnel and the two hangars. Also check that the overall dimensions of the three structures are aligned with the rear wall of the bow superstructure of the 2nd level (red arrows). Do not glue it yet!

568 Remove the funnel and the hangars just tested from the bow superstructure of the 1st and 2nd level and position the 3rd and 4th level without glue on the superstructure, always without gluing. Take the tower group with the gallery and the shooting station. Try to place the turret in the central joint of the upper navigation deck, paying close attention to placing the two side ladders outside the side railings of the deck (see detail above). Try, always without gluing, to assemble the gallery and the shooting station.

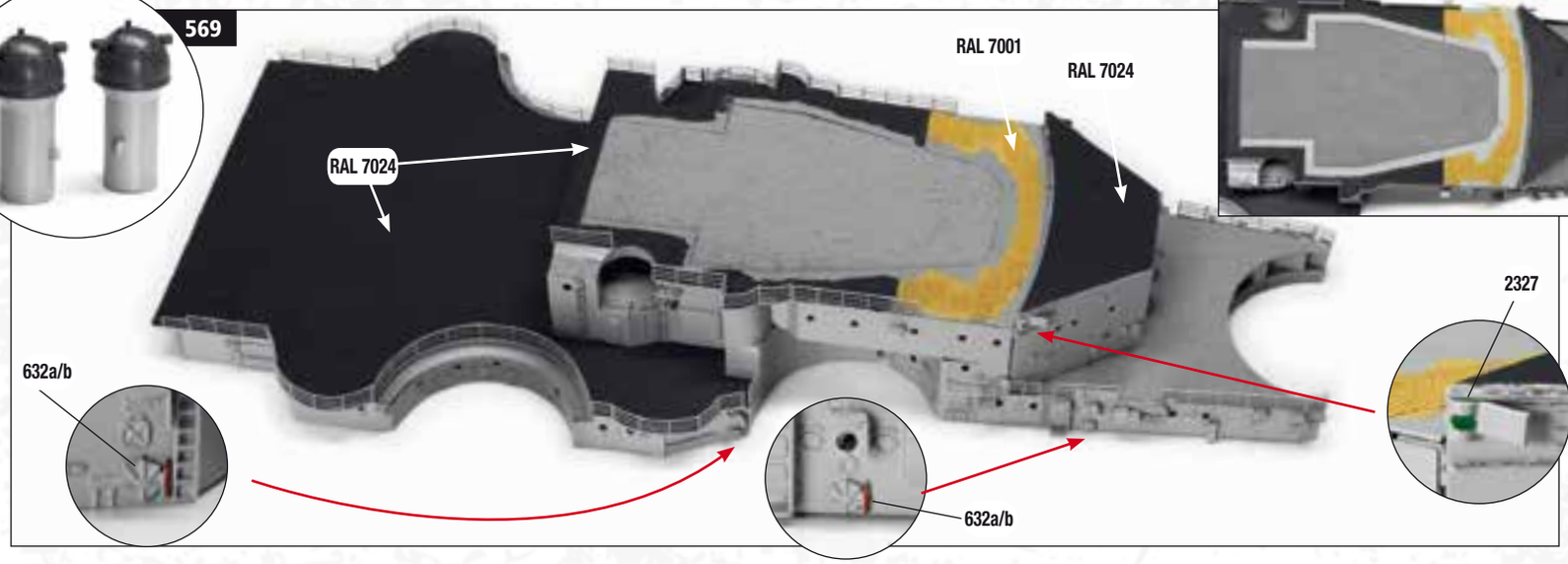

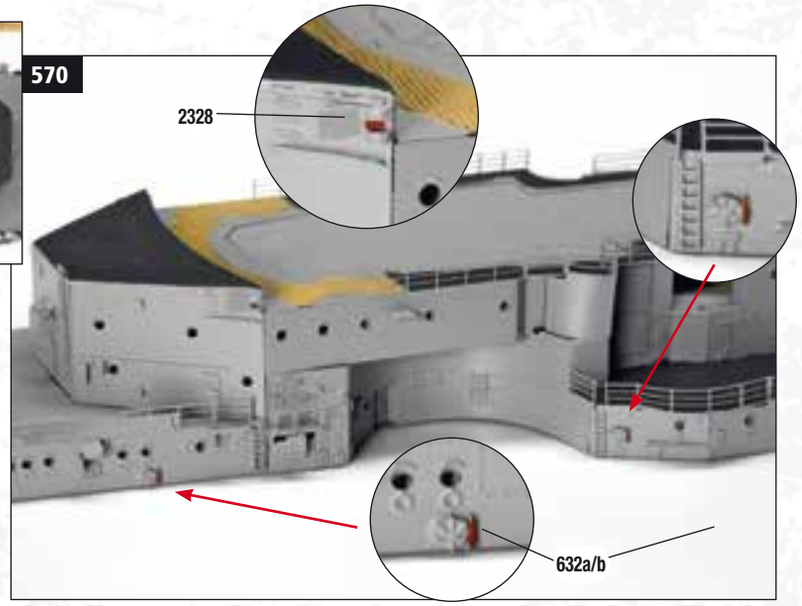

569 Now that you have checked the correct position of the main structures, you can proceed to colour the lower levels of the superstructure. With Ral 7001 spray paint, colour the entire superstructure of the 1st and 2nd level, walls and decks. Let it dry well, then apply a second coat of grey paint to create a colour base on the entire surface. Once dry, use a brush with Ral 1001 beige colour on the front brass floor of the control deck to simulate the colour of the wood, and with the colour Ral 7024 on the rear floor of the bridge, on the upper cover of the casemate and on the bridge. Do not worry about any colour smudges; they will be covered by the upper structures and by the handrails of the deck (next steps). Instead, be careful not to smudge the colour on the side walls or on the handrails; if necessary, use adhesive tape to mask the light grey areas. See also picture 570 to identify the areas of intervention of the colours. Take the previously assembled shooting towers and apply Ral 7001 on the support cylinders and Ral 7024 grey on the two caps. With a fine-tipped brush, paint in Ral 3003 red colour the levers of winders 632 and in Ral 6001 green navigation light 2327 (see details).

570 Move to the walls on the port side and colour in red the levers of winders 632 and light 2328 (see details).

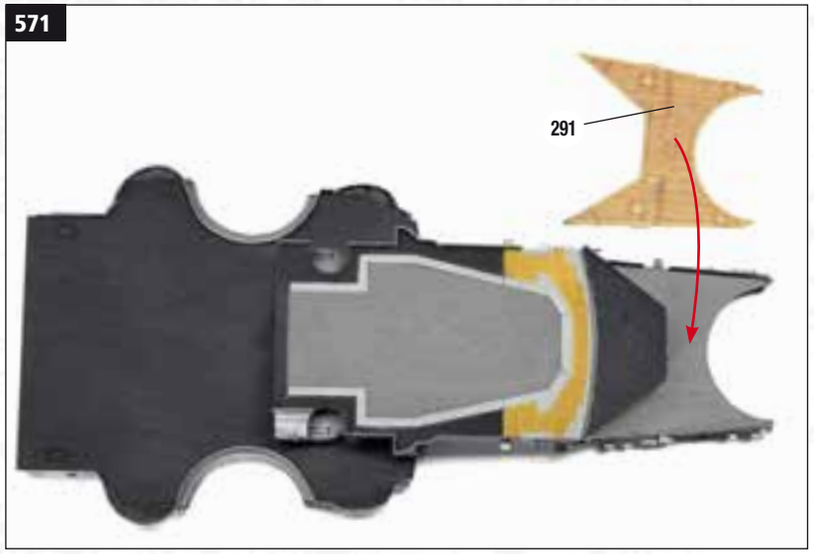

571 Take printed wooden plank floor 291, which you will need to cover the castle deck of the superstructure.

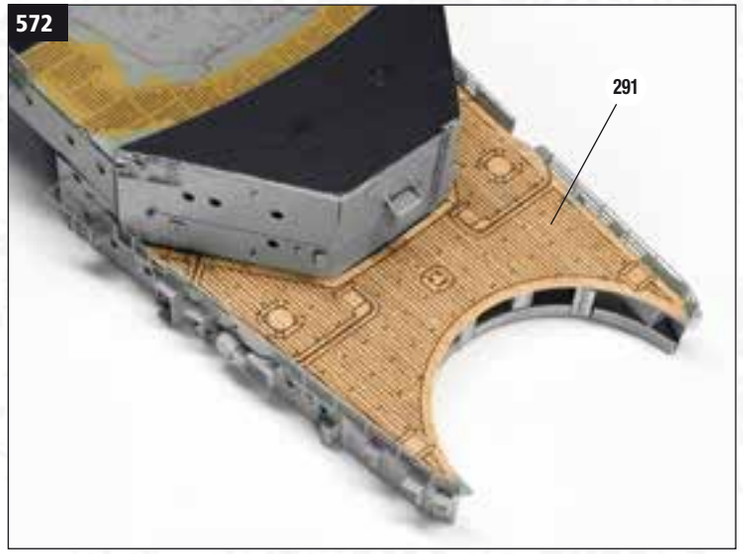

572 Insert plank floor 291 on the deck without glue. Check the position and if necessary finish the piece with sandpaper to adapt it to the deck floor. Then glue it.

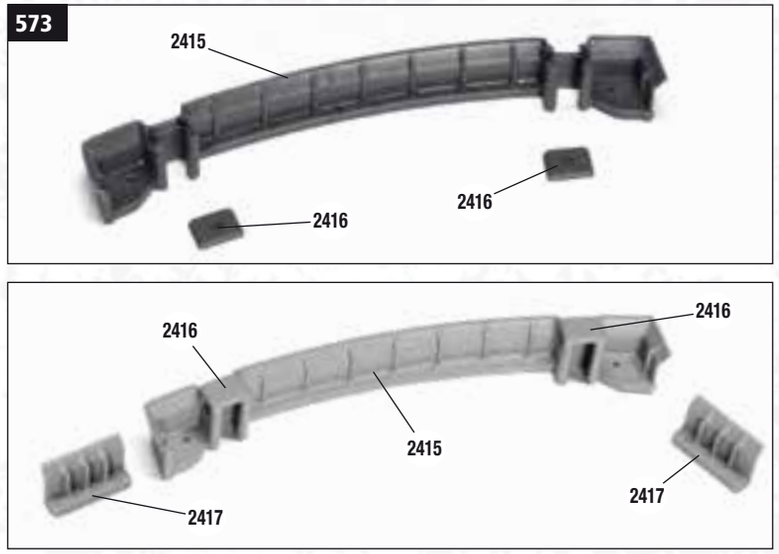

573 Take sprue P5 and take out the central handrail 2415 with the two canopies 2416 and the two side handrails 2417. Glue the two roofs on the sentry boxes integrated in the handrail. Colour the three handrails 2415 and 2417 (x2) with Ral 7001 grey.

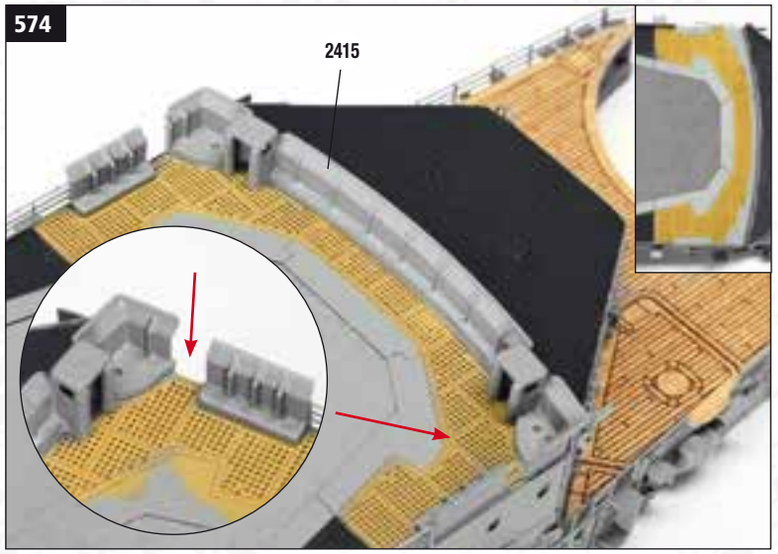

574 Glue handrail 2415 along the front edge of the bridge aligned in the centre on the deck drawing. Move to the sides and glue the two handrails 2417 symmetrically. Find the correct position on the drawing of the brass deck and leave the necessary space with the front handrail for the subsequent assembly of the turntables.

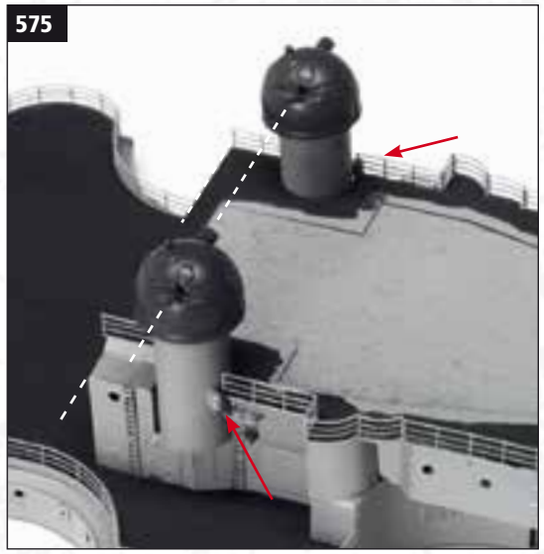

575 Glue the shooting positions to the superstructure on the sides of the bridge by placing the range finders parallel to the rear wall of the deck. The aerator on the support cylinders must be oriented forward almost against the railing (red arrows).

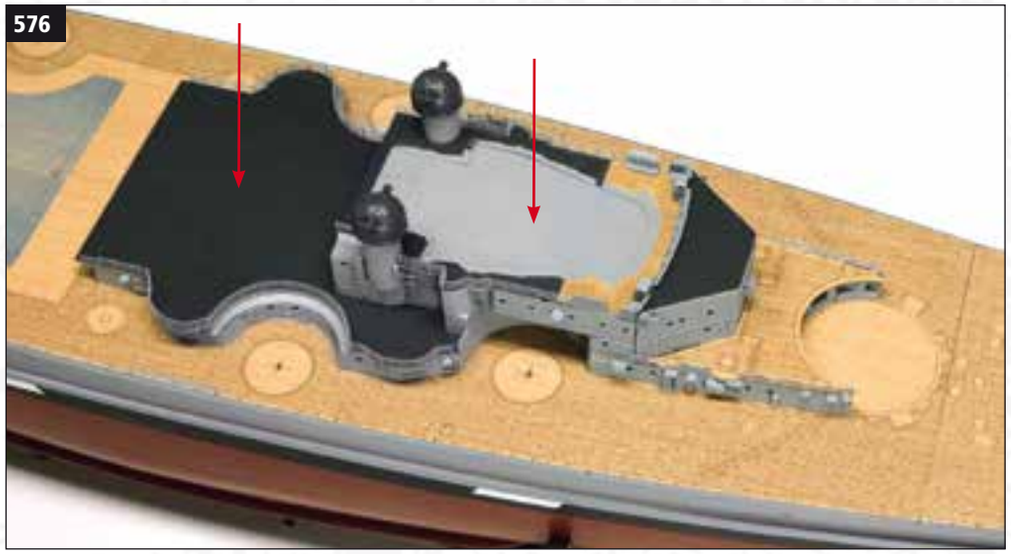

576 Take the model and glue the newly prepared lower structure onto the ship's deck. Find the correct position drawn on the deck cladding boards. Use the still free space on the bridge and on the lower deck (red arrows) using some weights in order to make the structure adhere well to the inclination of the ship's deck while waiting for the glue to dry. Let dry very well.

577

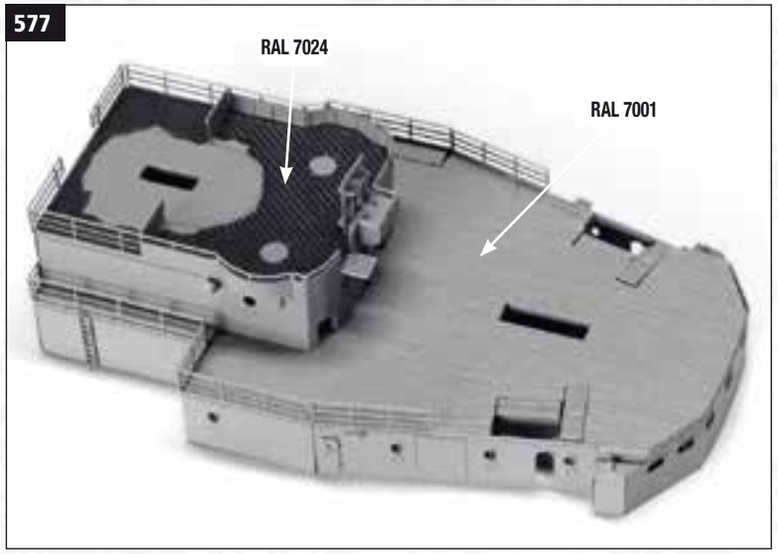

577 Meanwhile, prepare the colouring of the 3rd and 4th level superstructure with the use of Ral 7001 spray colour as the base for the entire structure and Ral 7024, by brush, only on the upper navigation deck. Observe carefully the above and the following picture to identify the colouring areas.

578

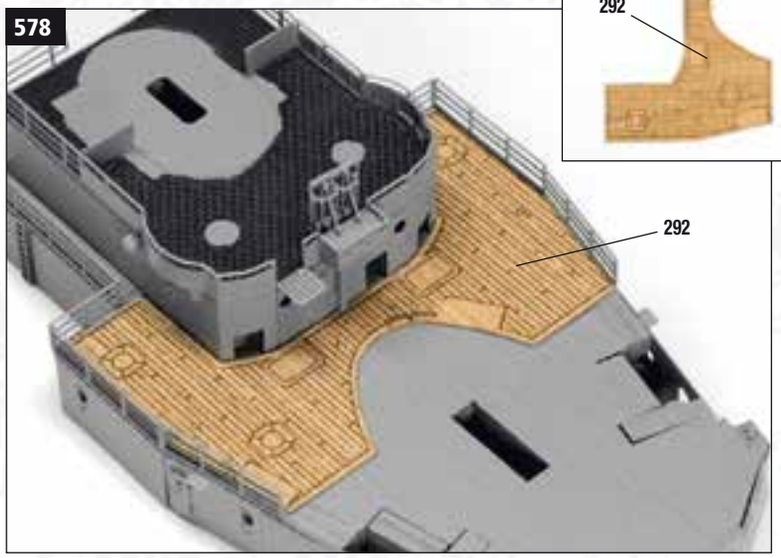

578 Take the printed wooden plank floor 292 to cover the navigation deck of the superstructure. Perform tests without glue and eventually finish the edges with sandpaper; then glue.

579

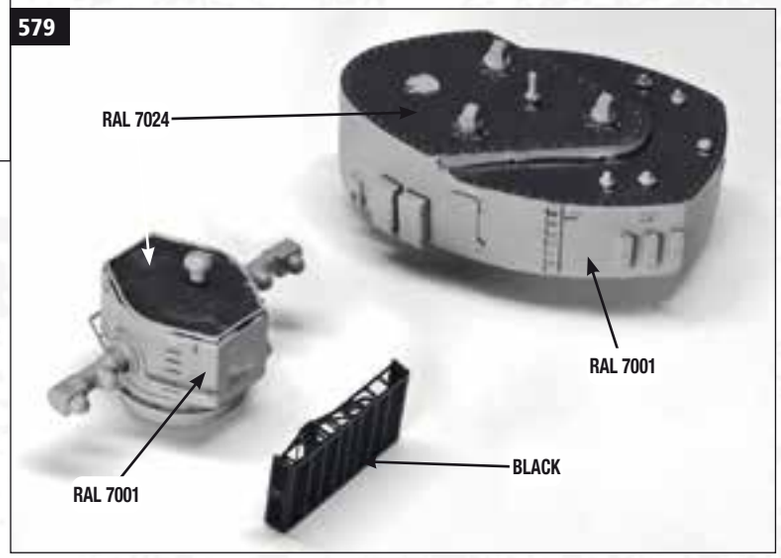

579 Take the front control station assembled on page 76 and the front shooting direction turret with its radar unit assembled on page 78. With Ral 7001, paint colour the station and turret entirely. Then finish by painting the roof of the station with Ral 7024 by brush, excluding the accessories as shown in the picture. With the same colour, also finish the turret floor with the exception of the profile on the edge and of the appliance. Paint the radar device in matt black.

580

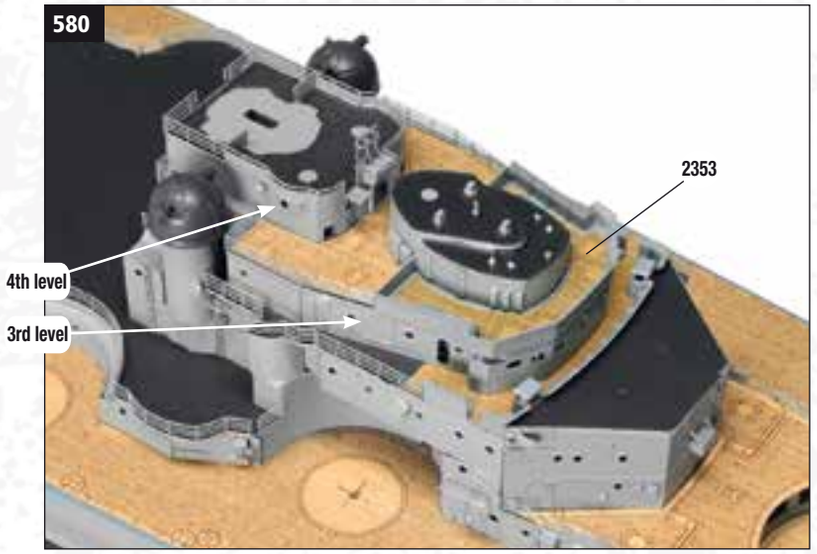

580 Once dry, take the model with the lower levels of the bow superstructure and glue the group of the 3rd and 4th levels of the bow superstructure on the bridge. Find the correct position drawn on the deck. Use the free space on the bridge and on the lower deck (red arrows) using some weights in order to make the structure adhere well while waiting for the glue to dry. Let it dry very well; once dry, glue the lower navigation deck 2353 and the front control station.

581

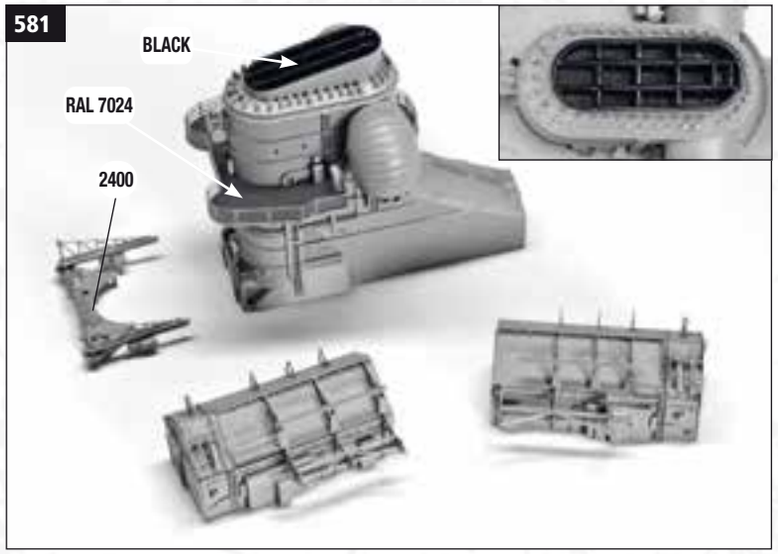

581 Take the funnel structure, the two hangars and platform 2400 with the aircraft cranes. With Ral 7001 paint, colour these structures entirely; then brush the roof of the funnel with a matt black as shown in detail in the picture and the base of the platform with Ral 7024 dark grey.

582

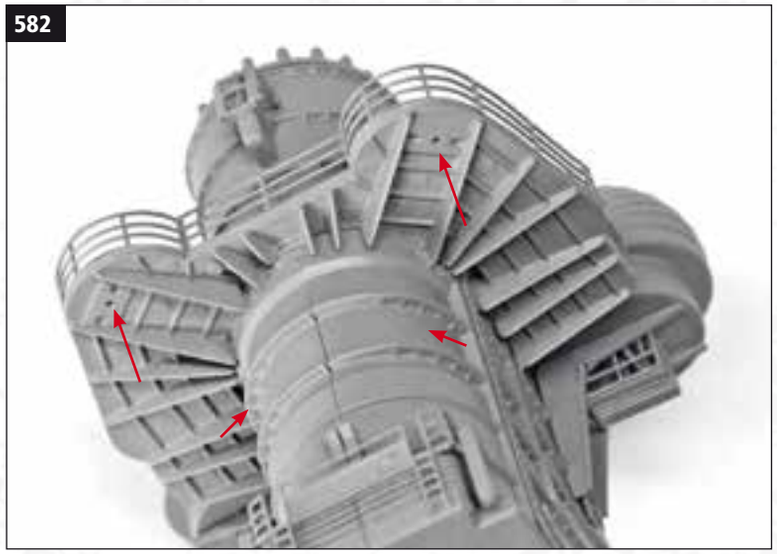

582 When the colour is dry, you can glue the crane service platform to the rear wall of the funnel. Observe the picture above to locate the reference reliefs on the wall in order to position the service platform and the holes on the upper platform to insert the crane arms.

583

583 Glue the platform to the funnel; if necessary, finish the internal curve of the platform with sandpaper to adapt it to the wall of the funnel.

584

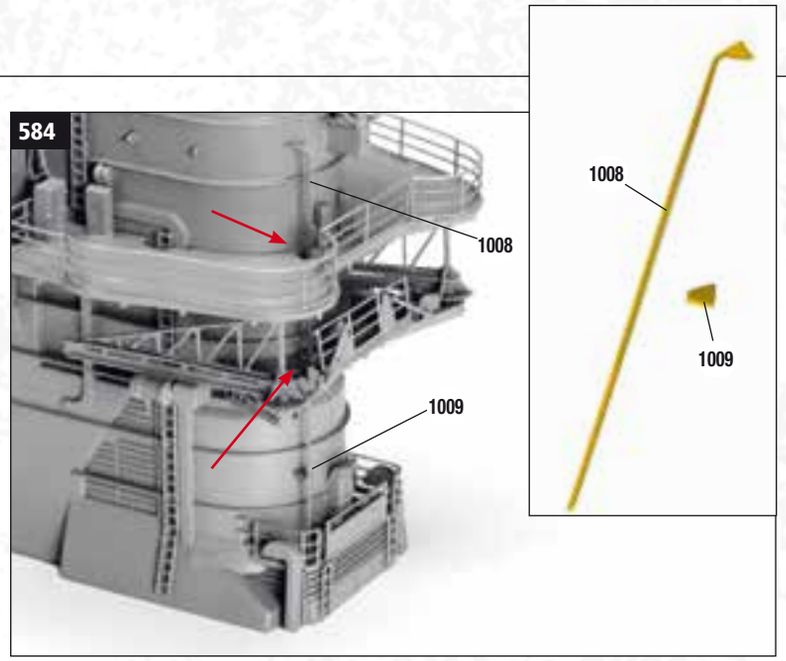

584 Now that the platform is glued in position, remove cable 1008 and bracket 1009 from sheet 1557b; bend the upper end of cable to 90° as shown in the detail above and paint the two components in Ral 7001 grey. Insert cable 1008 in the appropriate recesses of the platforms (indicated by the red arrows) up to the rear base of the funnel. Glue cable and bracket in place as shown in the picture.

585

585 The picture shows the assembly of cable 1008 with bracket 1009 seen from another angle.

586

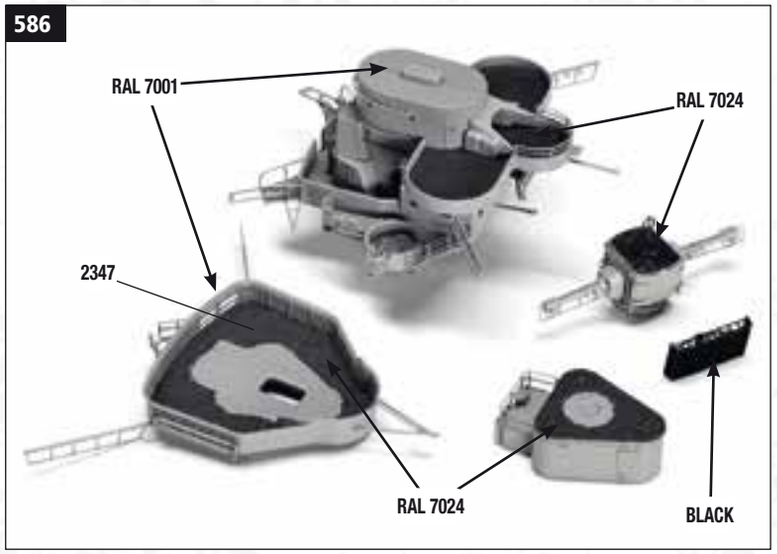

586 Now proceed to colour the other previously prepared structures. With Ral 7001 grey, completely paint the structure of the tower with the admiral's bridge; gallery 2347; the central shooting station and the central shooting tower. Once dry, brush with Ral 7024 on the floor of the admiral's bridge and gallery. With the same dark grey, paint the attic of the shooting station, the roof and the antenna of the central turret excluding the profile on the edge. Paint the radar device in matt black. Observe the picture to identify the colouring areas.

587

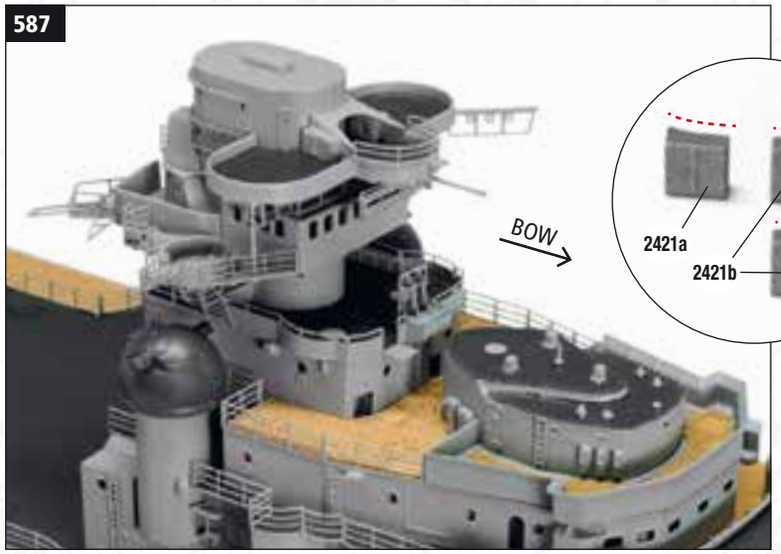

587 Once dry, take the tower structure and glue it on the upper navigation deck, as shown in the picture.

588

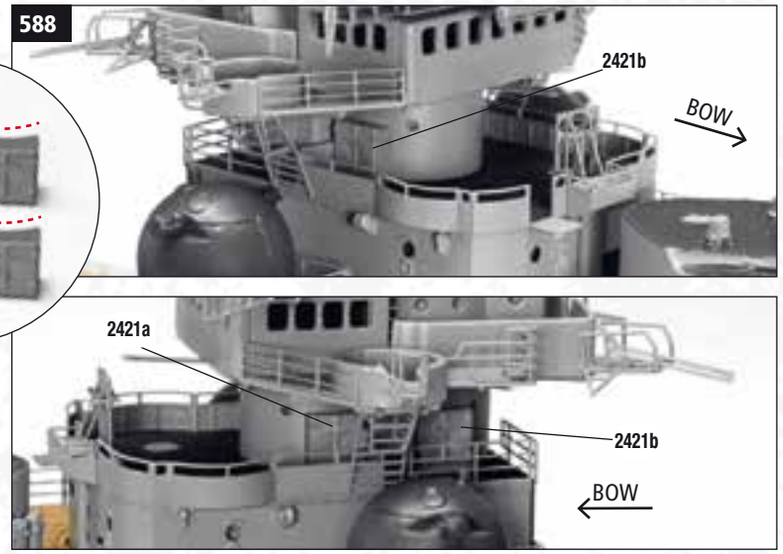

588 Remove the three cabinets 2421a and 2421b (x2) from sprue P25, which you will have to glue on the navigation deck against the side wall of the tower. As you can see, the rear wall of the three cabinets is curved to adapt to that of the tower. Observe the picture above and after painted them in Ral 7001 grey, glue them to the sides of the tower in the position shown.

589

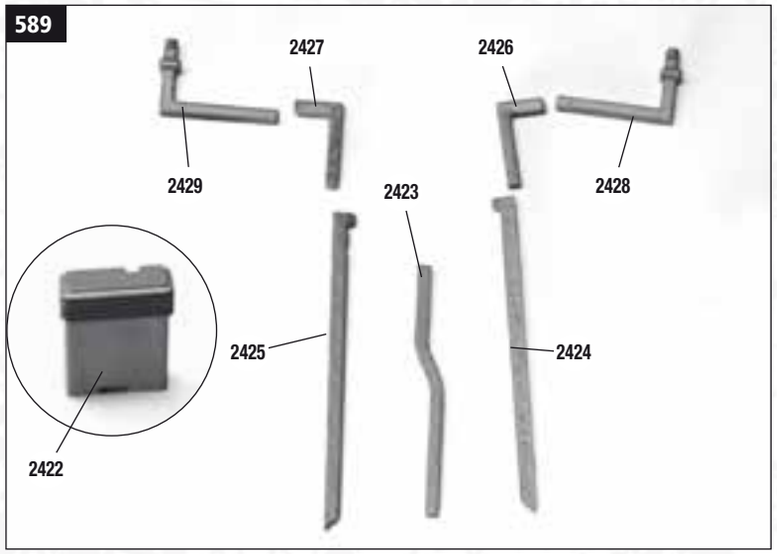

589 Prepare the pipes and aerator shown in the picture to prepare the rear wall of the bow superstructure (frame P24 and P44). Paint them in Ral 7001 grey.

590

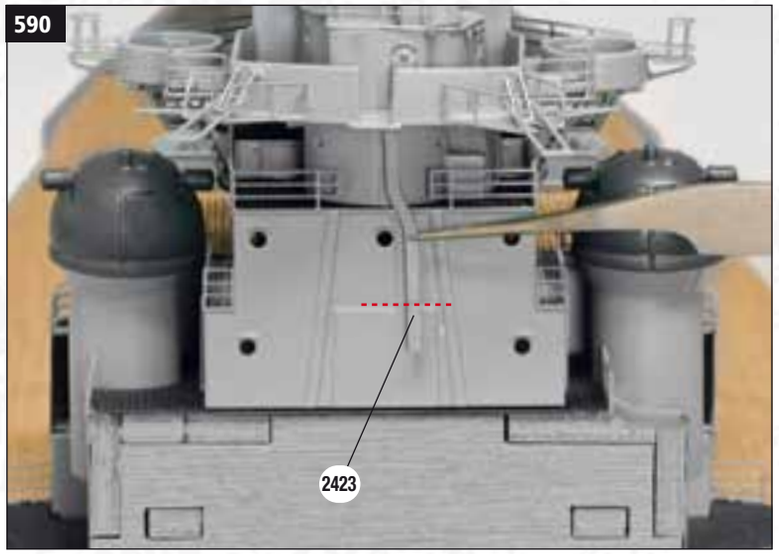

590 Try central tube 2423 on the wall without glue. Mark the excess that protrudes beyond the aerator panel drawn in relief on the wall (red lines). Remove the lower excess of the tube with a cutter.

591

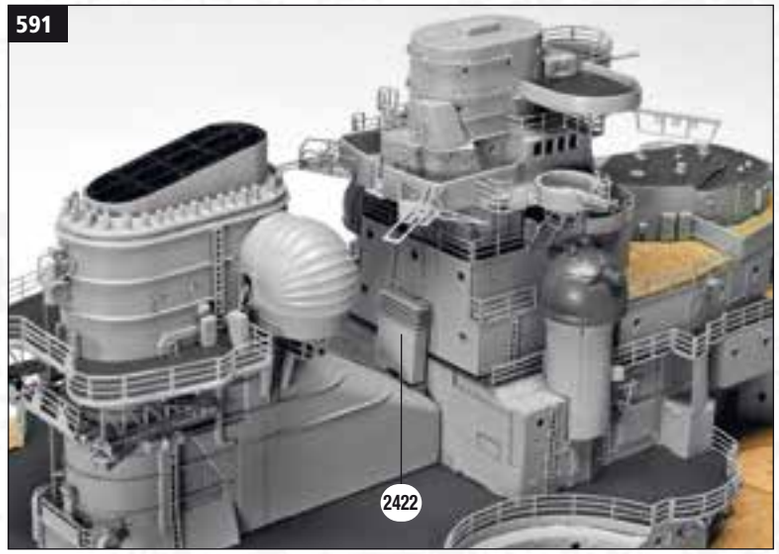

591 Without gluing, try to place the funnel on the lower deck in the centre of the superstructure. Check the position of aerator 2422 on the wall; then glue it.

592

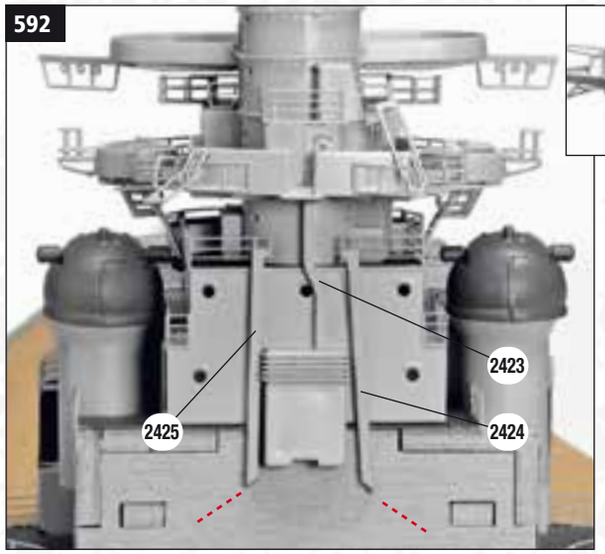

592 Remove the funnel from the deck and glue central tube 2423. Try aligning side tubes 2424, 2425 with the relief patterns on the wall. Pay attention to the inclination at the lower end of the two side pipes which must rest on the funnel. The upper end instead must be at the height of the second rail of the railing, as shown in the picture.

593

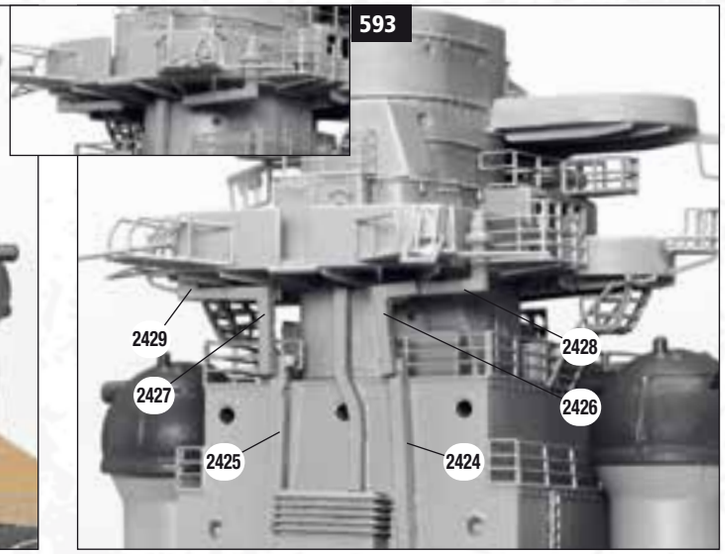

593 Glue the two tubes 2424, 2425 in place and the two upper tubes 2428 and 2429 on the sides of the admiral's bridge as shown in the detail above. Place the two elbow pipes 2426 and 2427 on the newly glued pipes and on lower pipes 2424, 2425; then glue them.

594

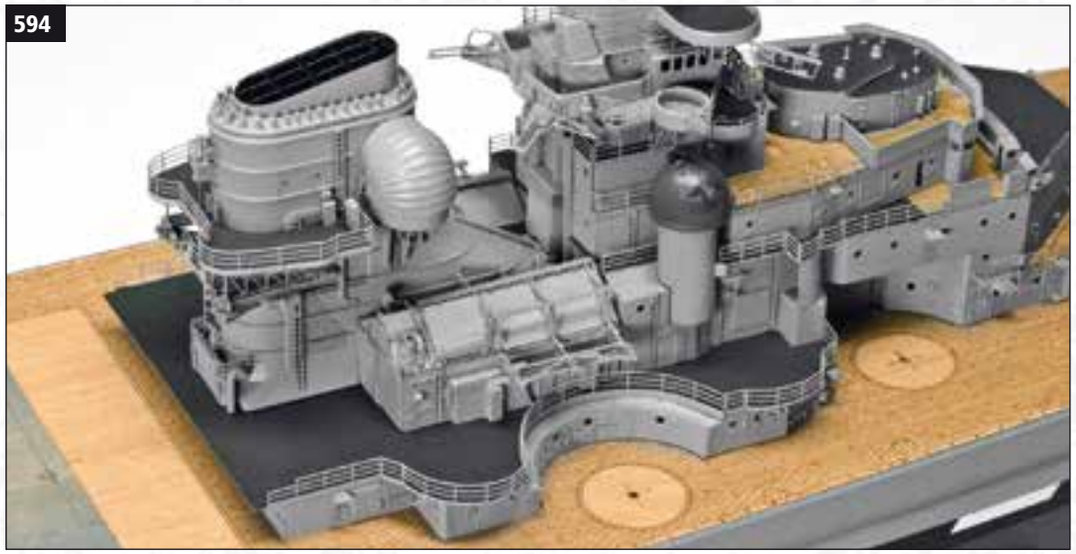

594 Now that the rear wall of the superstructure has been set up, you can definitively glue the funnel on the centre of the lower deck and the two hangars on the sides of the funnel.

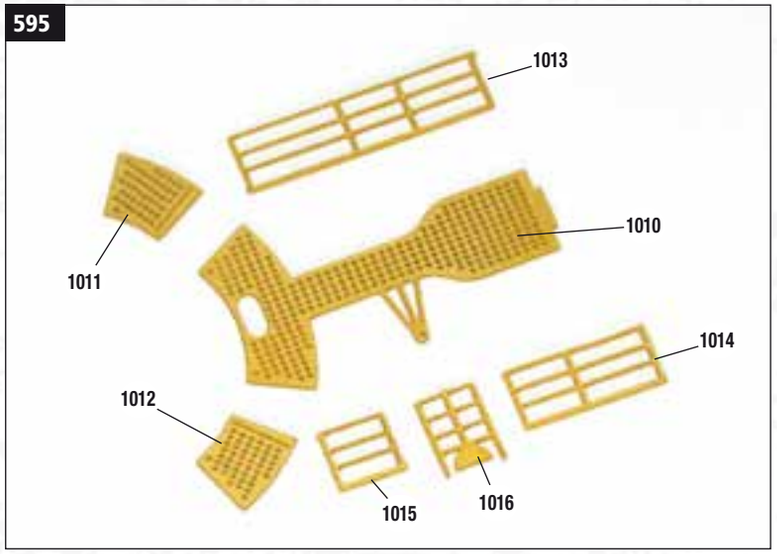

595 Remove the components shown in the picture of the connecting deck between the admiral's bridge and the funnel from sheet 1557b.

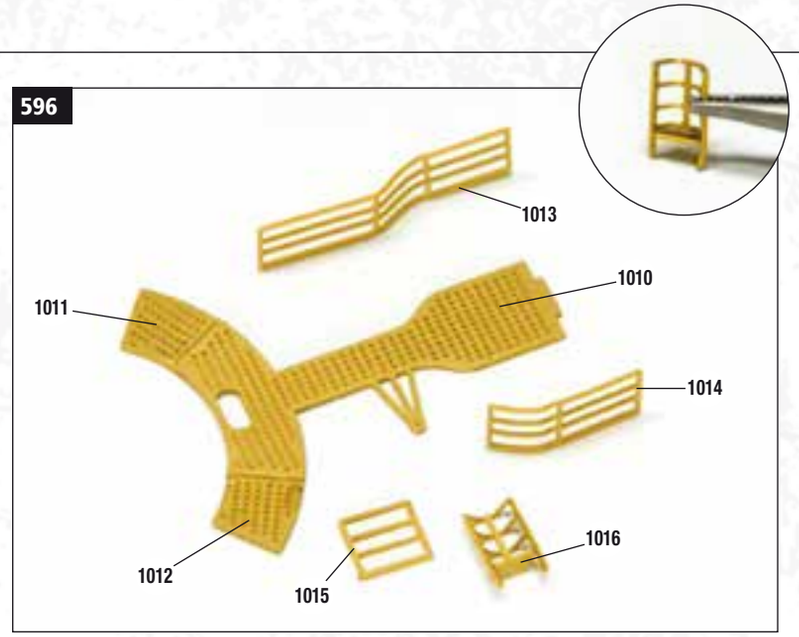

596 Glue the two side plates 1011 and 1012 to the gangway 1010, with the engraved lines facing upwards. Model railings 1013, 1014 adapting them to the edges of the gangway 1010. Warning: place the top edge of the railings down. Lift the small platform of signal station 1016 upwards; then bend the railing following the edge of the platform itself.

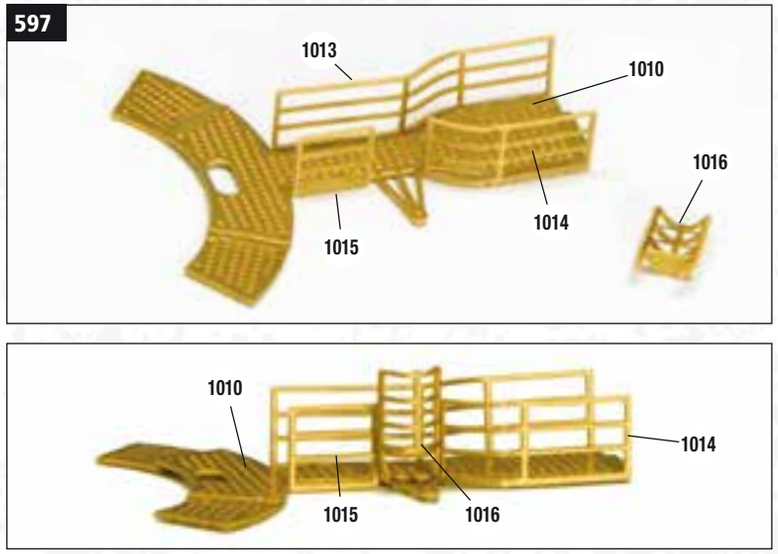

597 Glue the three railings on the side edges of the platform, as shown in the picture. Apply platform 1016 between the two railings 1014 and 1015; then glue. The support feet of this platform raise the railing section with respect to the others.

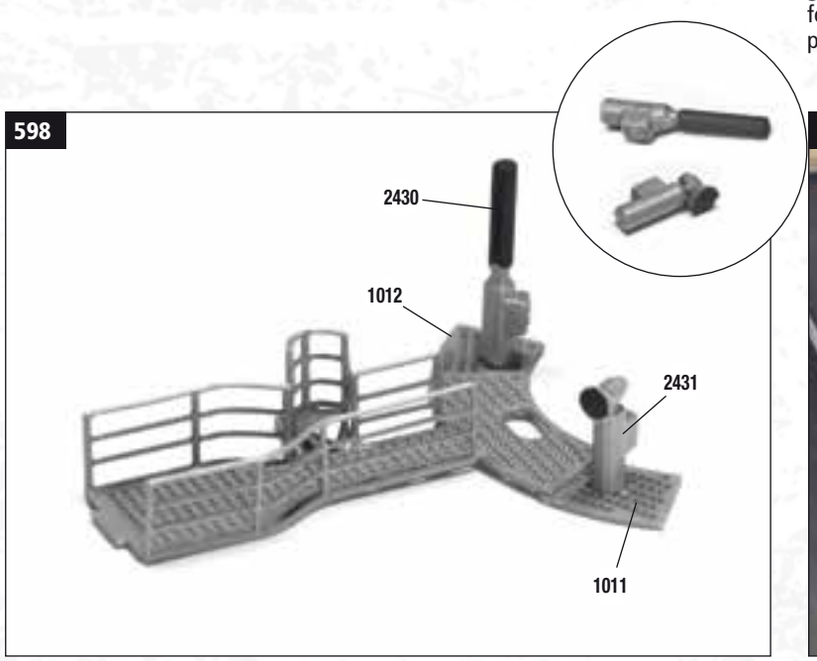

598 Paint the platform entirely in Ral 7001 grey together with the two components 2430 and 2431 which you can find on sprue P24. Paint the pipe of the steam whistle 2430 and the inside of the steam siren 2431 Ral 7024 grey with a brush. Glue these two elements to the sides of the gangway oriented as shown in the picture.

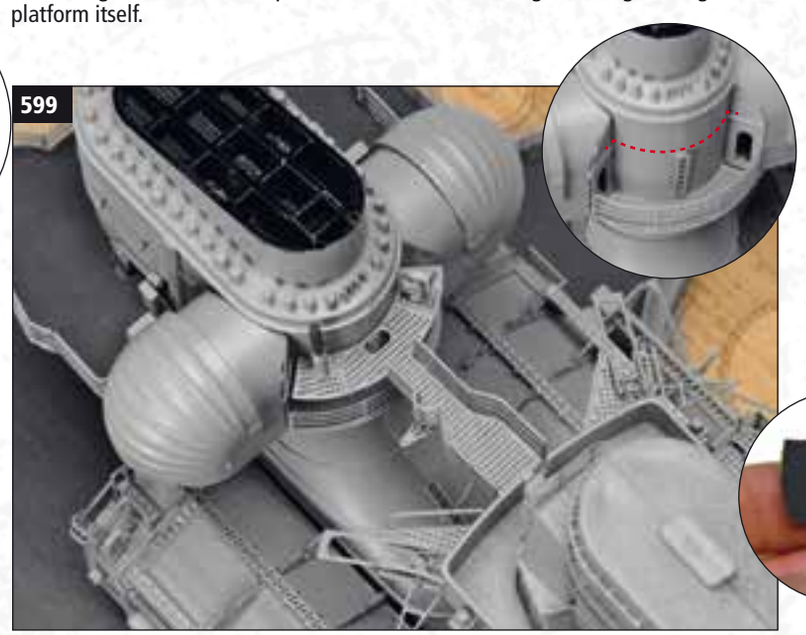

599 Insert gangway 1010 set up between the funnel and the admiral's bridge. Observe the detail above to find the correct position of the gangway indicated by the line in red. The front end of the gangway must rest against the rear opening of the admiral's bridge. Glue the gangway in place.

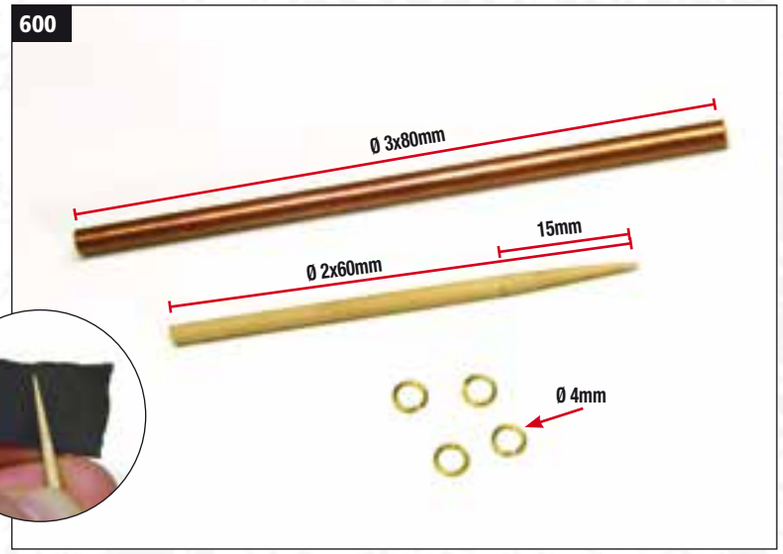

600 Now prepare the foremast, which you will have to assemble on the bow superstructure. Cut the Ø 2mm wooden rod (2524/02) to a 60mm length and taper the upper end by 15mm in conical shape. Cut the Ø 3mm copper pipe (2750/03) to a 80mm length and prepare 4 brass Ø 4mm rings (4000/04).

710

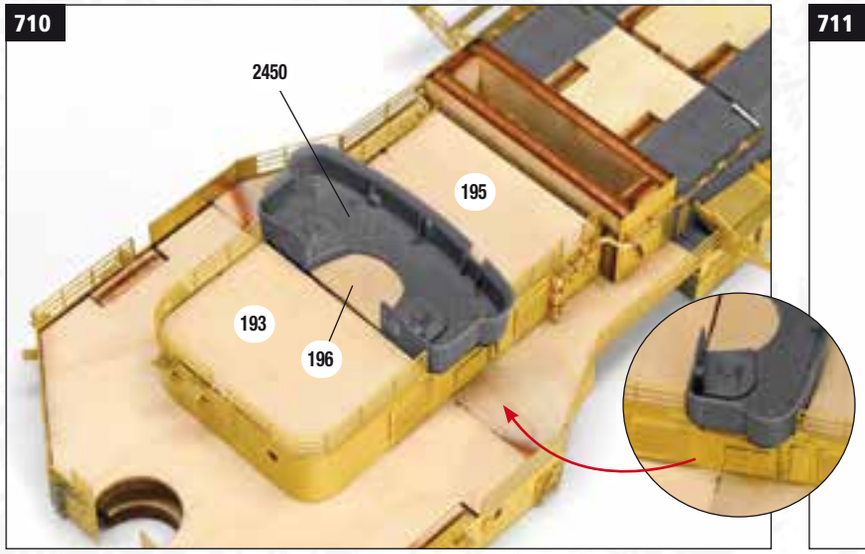

710 Try to insert bridge 2450 in the opening on the deck between claddings 193-195 and the four side railings. If necessary, slightly sand the walls of the bridge with sandpaper at the points of contact with the railings. Once you have checked the correct insertion, fix it to the structure with superglue.

711

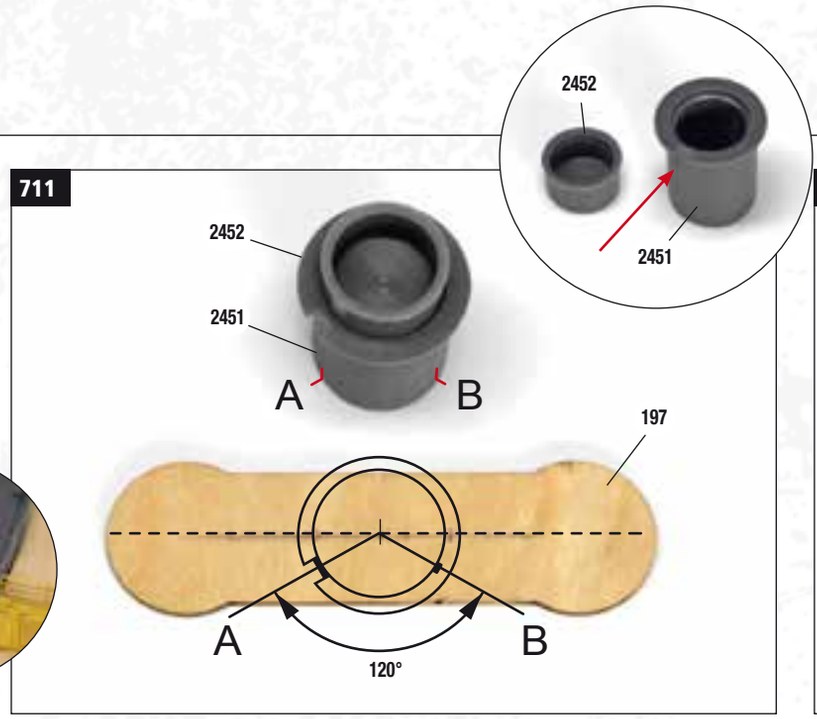

711 Now prepare the turret of the shooting direction station C. Assemble platform 2452 on turret 2451 (P50). Warning: the stern superstructure is made up of two similar turrets; take the lower one and with the joint in the flange. Draw the centre line in pencil on piece 197 (step 643); position the turret in the centre of the piece and orient the joint on position A. Mark in pencil along the turret cylinder positions A and B of the drainage pipes which you will assemble in the following steps.

712

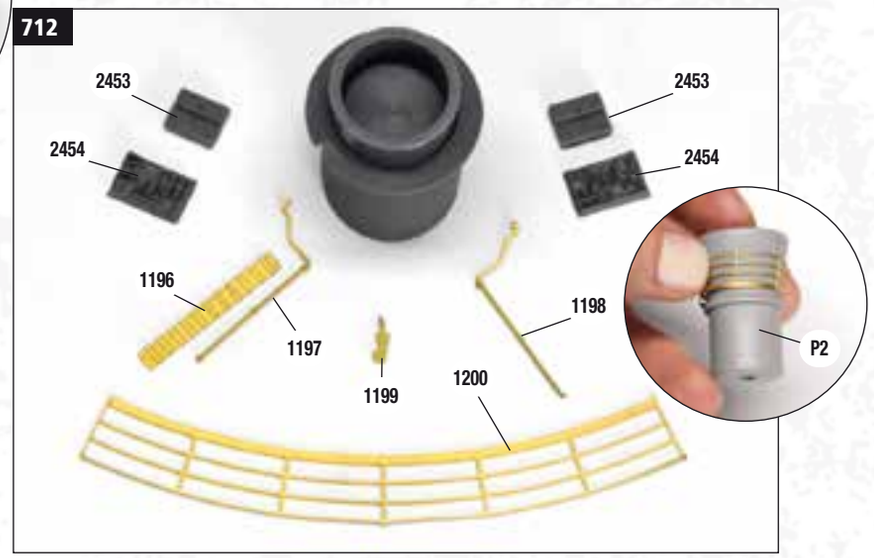

712 Now that you have returned the position of the elements to the turret, you can remove ladder 1196, two drainage pipes 1197, 1198, padeye 1199, railing 1200 and elements 2453 (x2) and 2454 (x2) from sprue P25. Temporarily put cover 197 aside. Model the railing by wrapping it around the plastic template P2.

713

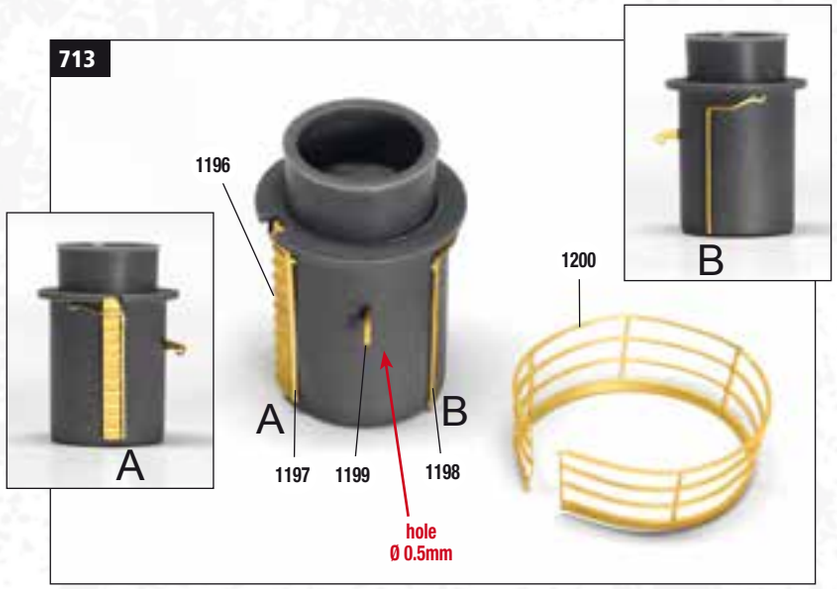

713 Glue ladder 1196 vertically along the turret aligned with the joint in the flange. Fasten the vertical part of tube 1197 to the right of the ladder, the upper end instead curves to the left above the ladder and ends under the flange (see detail on the left). In the same way, glue pipe 1198 vertically along the turret in position B (see detail on the right). With a Ø 0.5mm drill bit, drill a hole in the cylinder in the centre between the two pipes and glue padeye 1199.

714

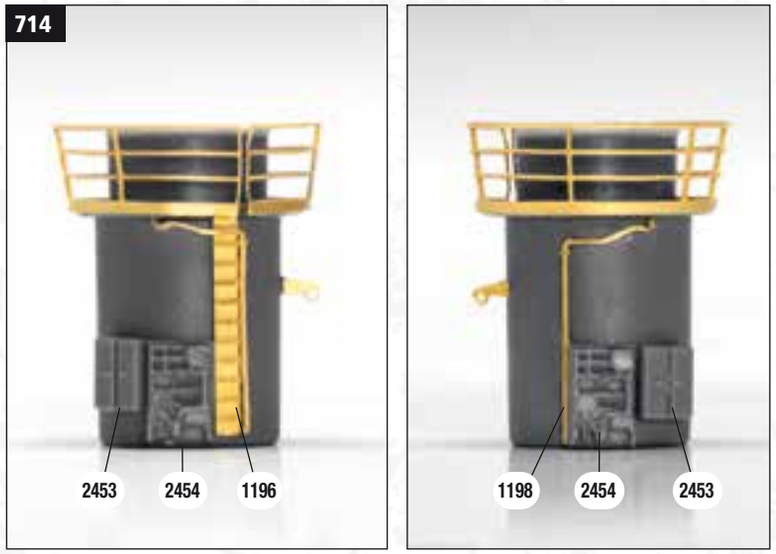

714 On the left side of ladder 1196, glue electrical panel 2454 and cabinet 2453; next to the 1198 tube glue the second electrical panel 2454 and the other the cabinet 2453 symmetrically. Finally glue railing 1200 along the edge of the flange. Keep aside the turret, which will be fixed to the superstructure at a later time.

715

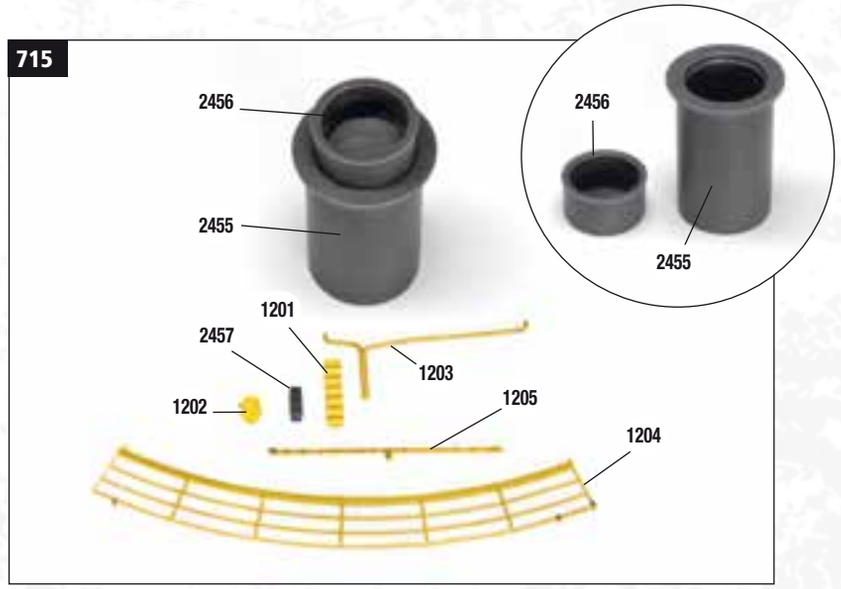

715 Now prepare the other turret of the shooting direction station D, the highest one. Join the two plastic components 2455-2456 (P49) and remove the accessories shown in the photo from sheet 1559 and sprue P25.

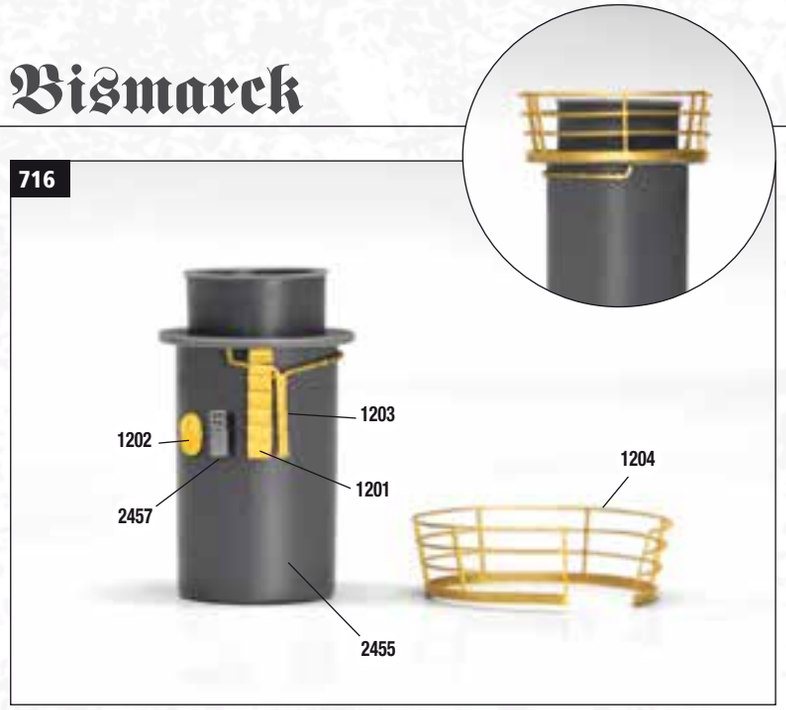

716 Glue the ladder to cylinder 2455 vertically against the flange. Bend and glue the right end of drainage pipe 1203 around the turret to below the flange (see detail above); the other end instead curves to the left above the ladder and also ends under the flange. On the left side of ladder 1201, glue aerator 2457 and hatch 1202 with the hinges oriented to the left. Align these two elements with the bottom edge of ladder 1201. Finally glue railing 1204 along the edge of the flange.

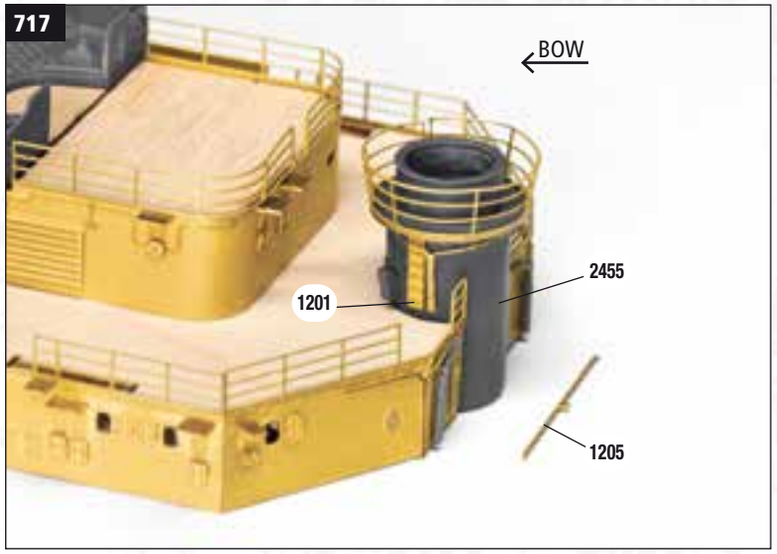

717 Try to insert without gluing turret 2455 in the rear semicircular opening of the stern superstructure; point ladder 1201 to the port side.

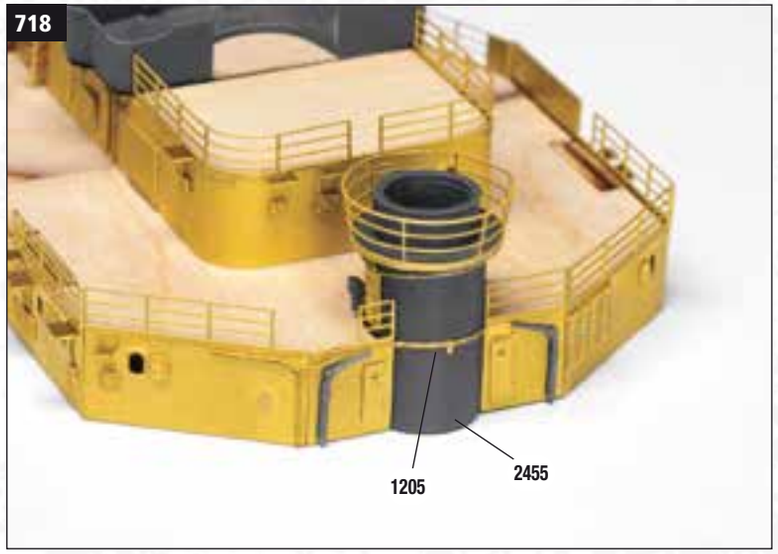

718 Model cable 1205 and glue it to the cylinder of turret 2455 aligned with the cable in relief on the side walls. Place the cable's electrical panel in the centre.

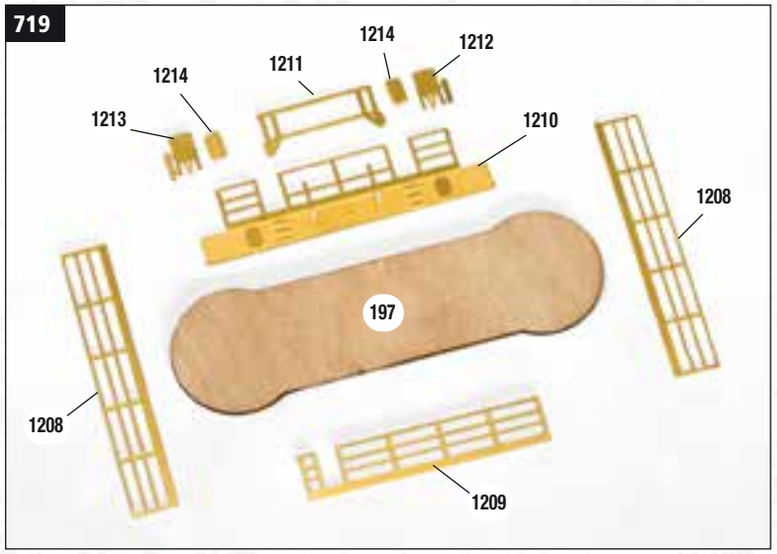

719 Take the platform of searchlight deck 197 (step 711) and all its accessories, which you can find on sheet 1559 shown in the picture.

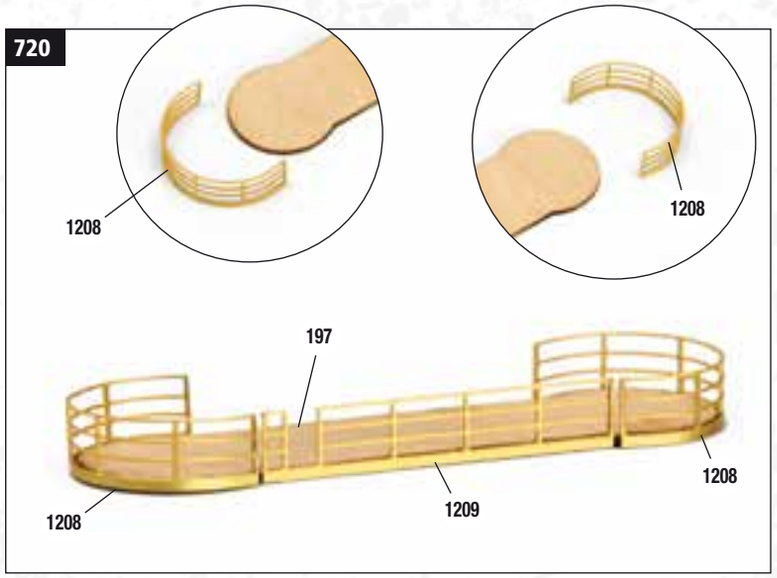

720 Using the cylindrical template P2, model the two railings 1208. Check that the curve follows the rounded profile of the platform; then glue the two railings 1208 to the semicircular ends of the platform and railing 1209 on the linear side. Place the thicker edge of the railings against the profile of platform 197.

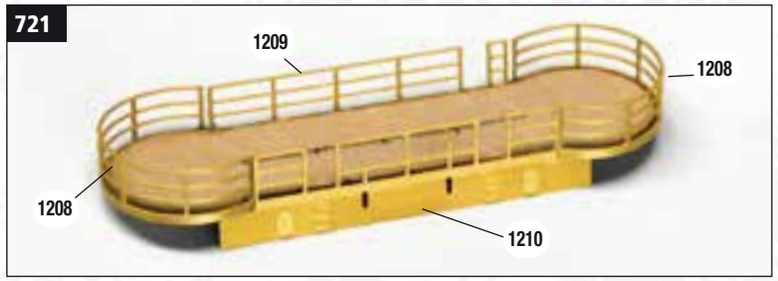

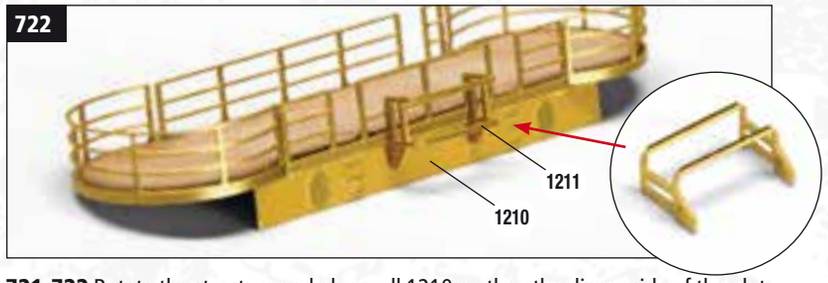

721-722 Rotate the structure and glue wall 1210 on the other linear side of the platform. Align the railing with the two sides; the wall will protrude under the platform. With flat nose pliers, bend along the engraved marks the frame of piece 1211 as shown in detail. Fix the frame to the centre of the railing in the joints of wall 1210.

723

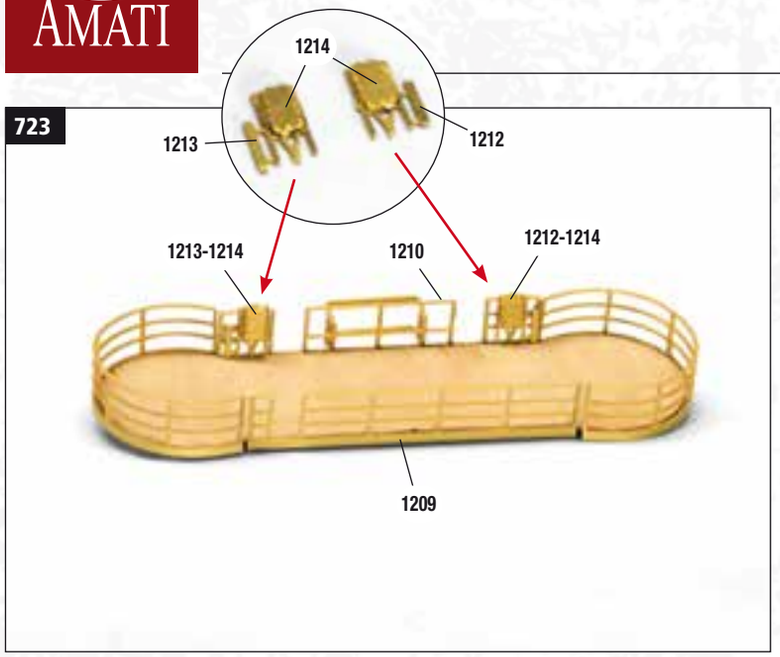

723 Couple the two plates 1214 on each piece 1212 and 1213 and glue. Rotate the structure and glue the two junction boxes 1213-1214, 1212-1213 on the inside of railing 1210, oriented as shown in the picture.

724

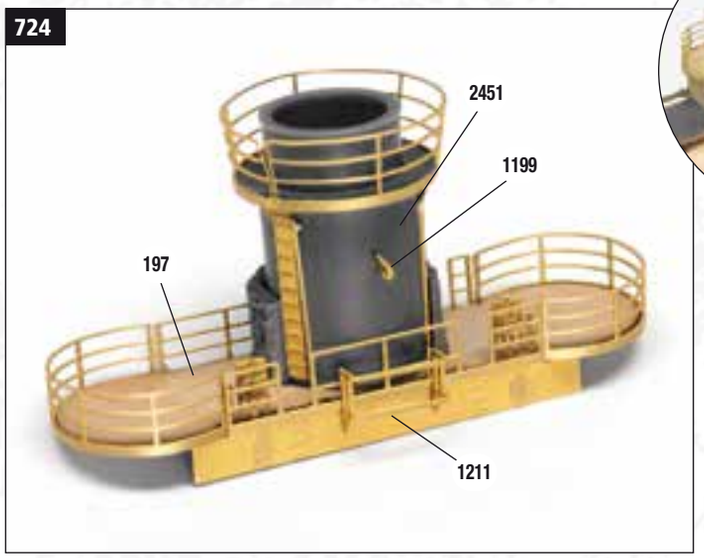

724 Take the turret of shooting direction station 2451 and fix it to the centre of platform 197. Align padeye 1199 on the turret above the platform frame.

725

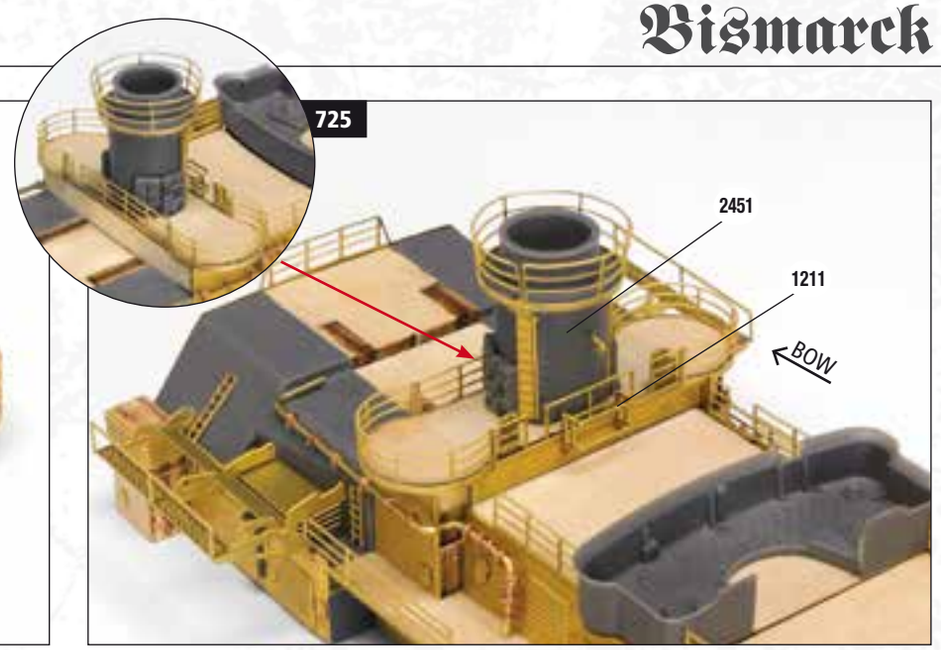

725 Position the newly assembled structure on the stern superstructure, check the alignments and glue arranging frame 1211 of the rack towards the stern.

726

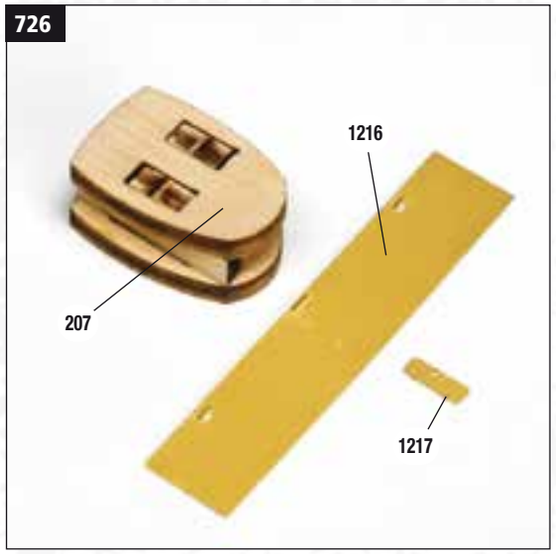

726 Retrieve structure 207 of the rear control station assembled in step 654 and remove covering wall 1216 and door 1217 from sheet 1559.

727

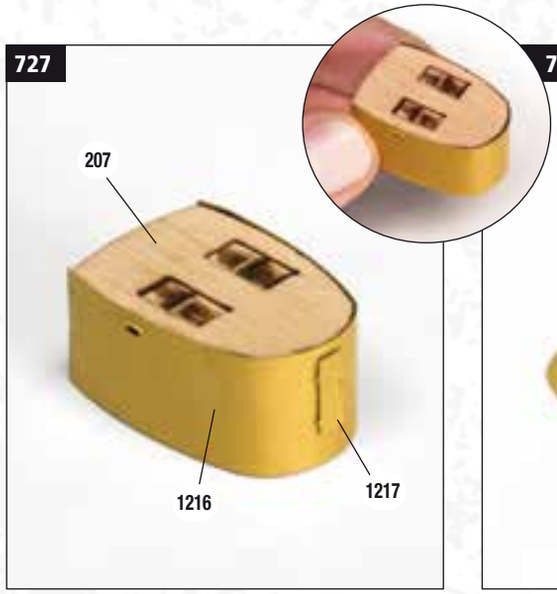

727 Round the wall in the central part until it adapts to the front curve of structure 207. Try it without glue, then glue. Fix door 1217 aligned with the hinges engraved on the wall.

728

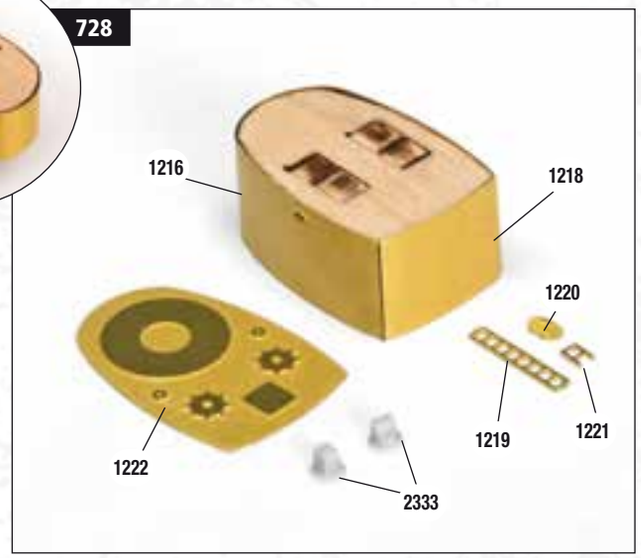

728 Rotate the structure and prepare the other accessories depicted in the picture and which you can find on sheet 1559. Separate the two searchlights 2333 from sprue P36 with a cutter.

729

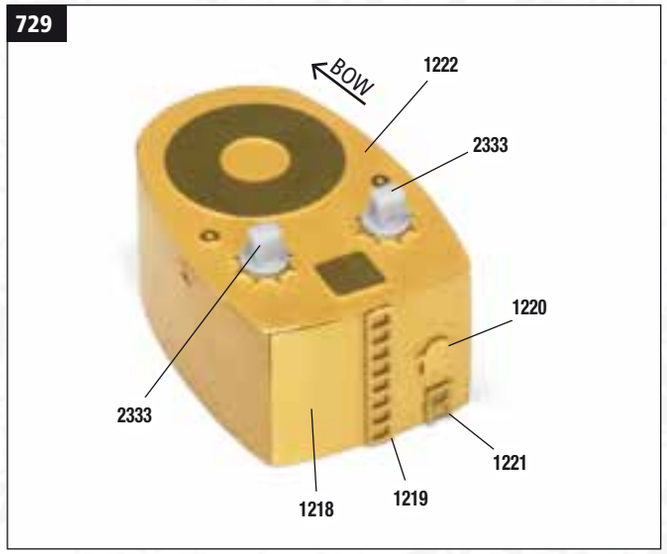

729 Close the structure with claddings 1218 and 1222. Fix the accessories to wall 1218: ladder 1219 in the centre vertically, hatch 1220 aligned with the relief engraved on the wall and under ladder 1221. Move to the roof and fix the two searchlights 2333 aligned with the circular drawings engraved on cladding 1222.

730

730 Remove components of the turret of the rear shooting direction station from sprue P46 and lay them on your worktop oriented as shown in the picture above. Join turret 2461 to base 2460 as shown in detail above.

731

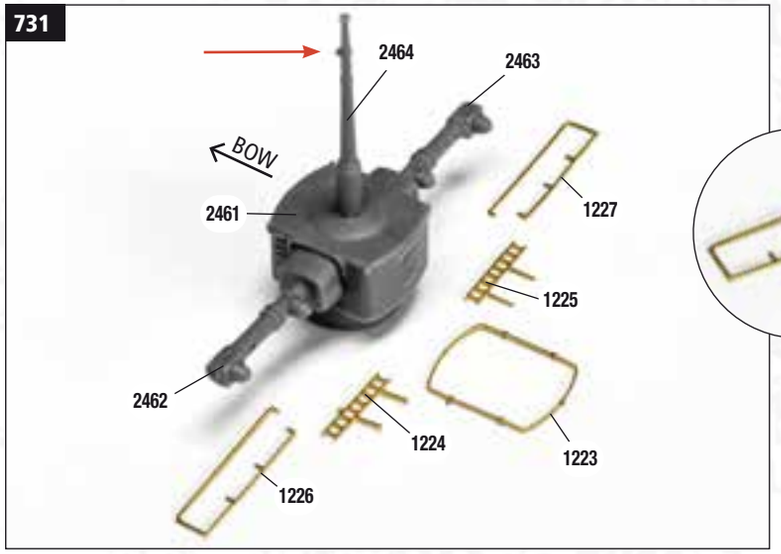

731 Glue the two searchlights 2462 and 2463 to the sides of the turret with the protruding lenses oriented towards the stern. Apply mast 2464 in the central hole on the roof of the turret. On the top of the mast there is a protrusion (red arrow) on which a yard will be applied; point this protrusion towards the bow. Prepare the accessories shown in the picture for the preparation of the turret which you can find on photo-etched sheet 1559.

732

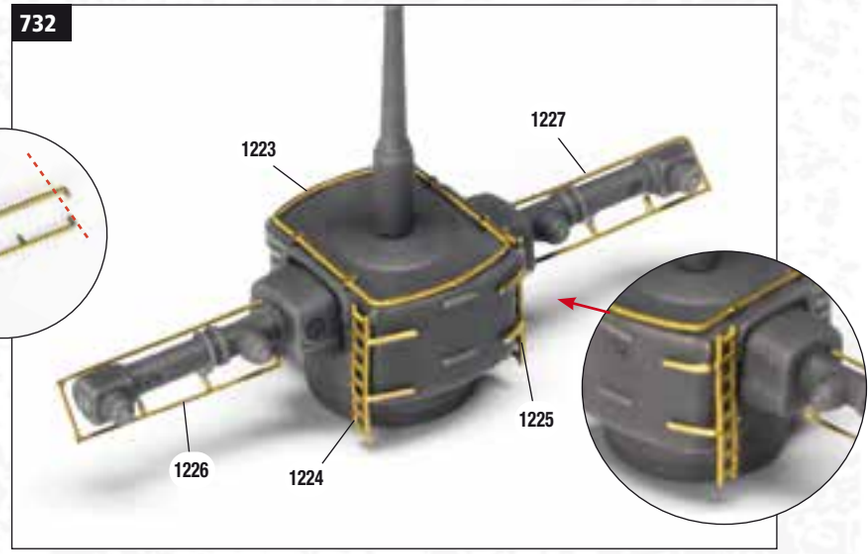

732 Glue profile 1223 along the edge of the roof of the turret and the two profiles 1226, 1227 to searchlights 2462, 2463, arranged as shown in the picture. Eventually trim the excess end of the antennas, (the one on the side without brackets, see detail). Glue the two ladders 1224, 1225 to the sides of the turret; bend the side brackets of the ladders against the rear wall of the turret.

733

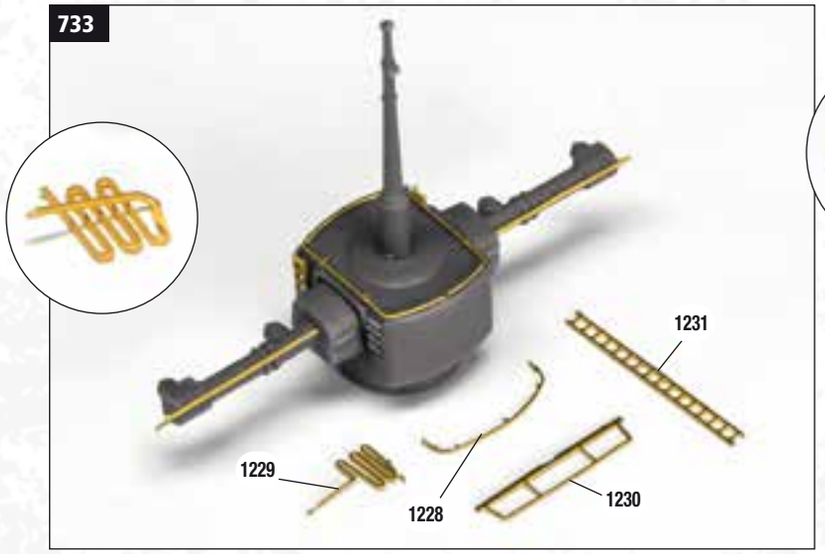

733 Rotate the structure and prepare the other accessories 1228, 1229, 1230 and 1231 (sheet 1559); to continue with the preparation of the bow side of the structure. bend the end of coil 1229 as shown in the detail.

734

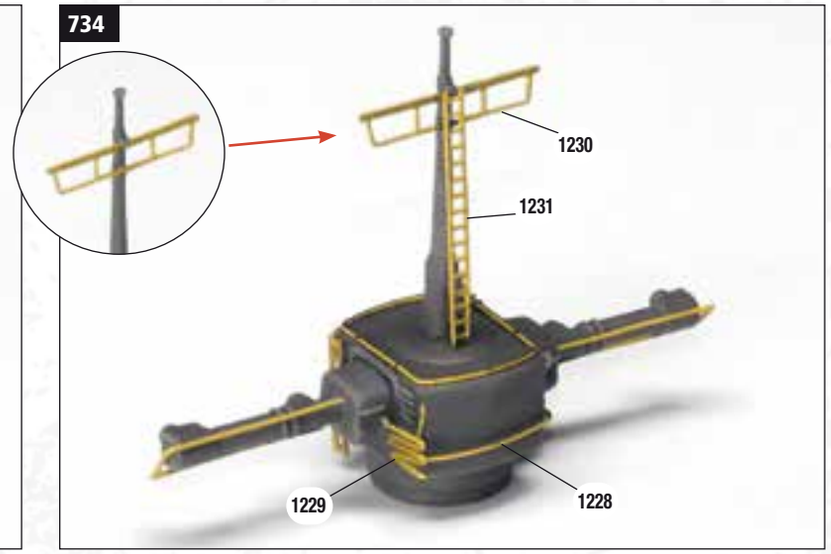

734 Glue profile 1228 to the turret structure; insert coil 1229 under profile 1228 and glue it on one side of the turret, as shown in the picture. Fix yard 1230 in the centre, under the projection of the mast and ladder 1231 vertically above the yard.

735

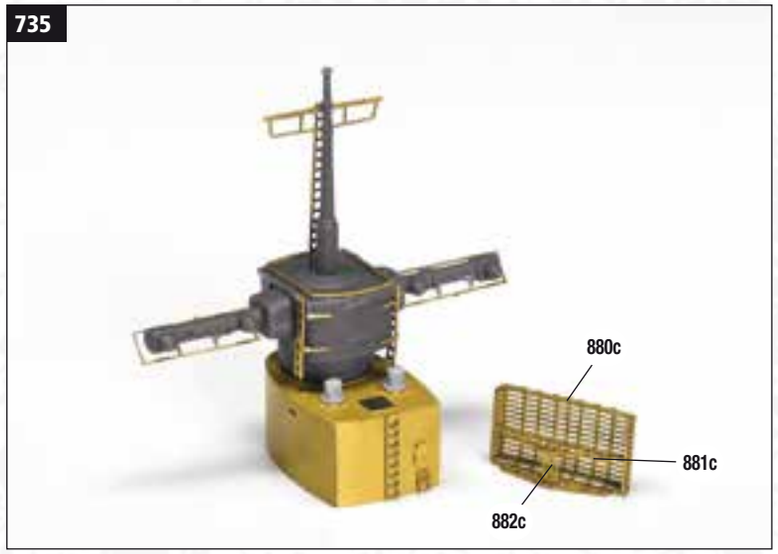

735 Now remove pieces 880c, 881c, 882c from sheet 1559 and following the assembly instructions presented from step 387 to step 389 prepare the third radar device, which you will have to assemble later on the front wall of the newly assembled turret. Glue the turret on the circular sign engraved on the roof of the rear command station prepared on the previous page. Radar 880c will be glued to the turret only after painting these three structures; keep them aside.

736

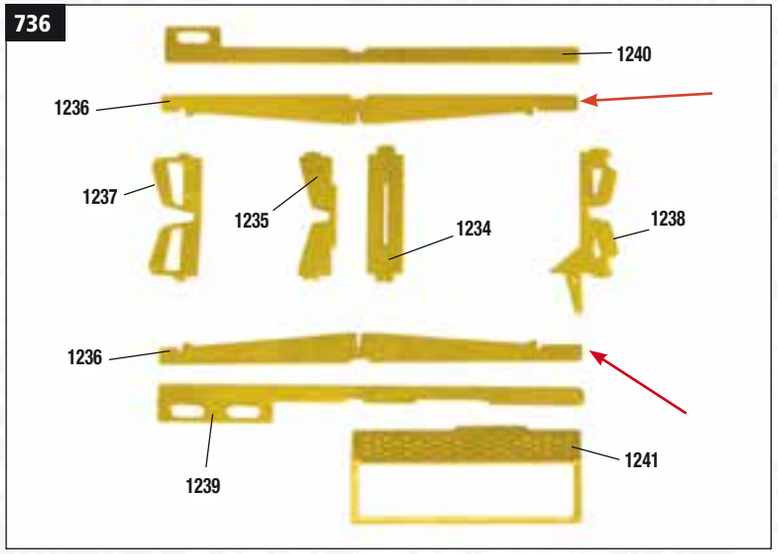

736 Now prepare the holders for the connection motor boats. Remove the elements shown in the picture from sheet 1559 and lay them on your worktop in the order presented. Identify the longer end of rails 1236, (red arrows), it indicates the position of support 1238.

737

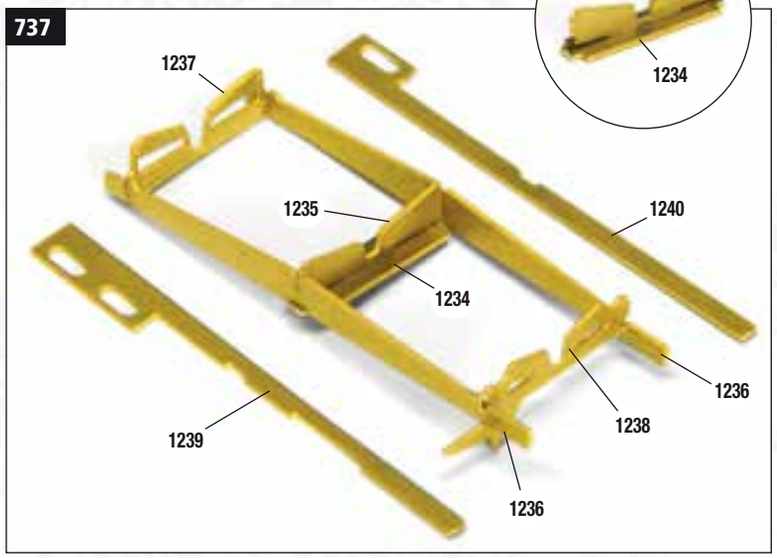

737 Assembled in the central joint of base 1234 and support 1235 (see detail). Arrange the two rails 1236 symmetrically and glue supports 1234-1235, 1237, 1238 in the joints.

738

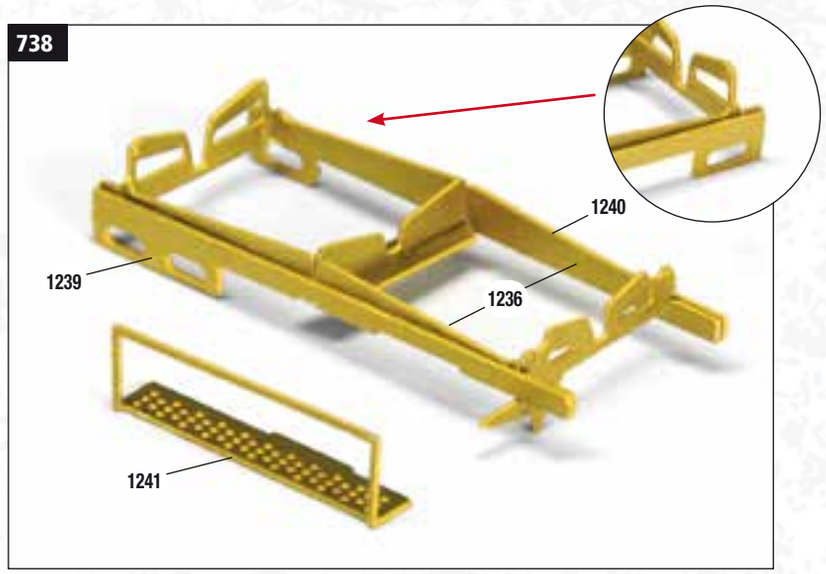

738 Glue piece 1239 (with the two holes) to rail 1236 and piece 1240 (with one hole) on the side opposite the other rail 1236. Bend the railing of gangway 1241 to 90°.

739

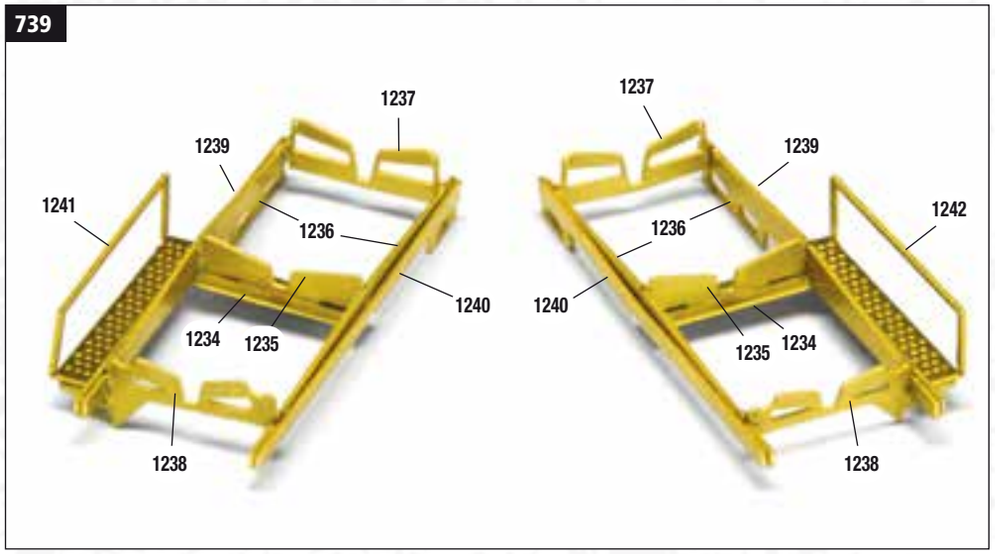

739 Complete the first structure, that of the starboard side, by gluing gangway 1241 to the lateral joint of the structure. With as many pieces from 1234 to 1240, create a second structure mirroring the previous one. For this structure, you will have to use the gangway 1242. Observe carefully the picture above to identify the exact position of the elements. The holders for the connection motor boats are ready; keep them aside as they will be fixed to the stern superstructure after the painting steps.

740

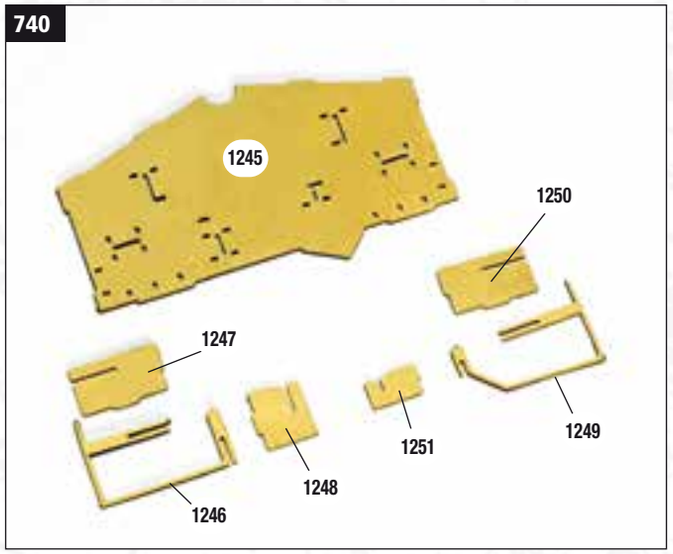

740 Now prepare the stern signal station with the pieces represented in the picture and which you can find on sheet 1559.

741

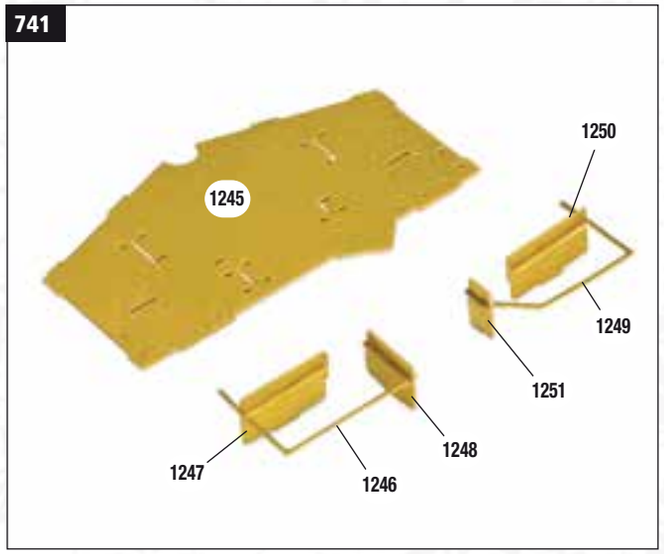

741 Assemble walls 1247, 1248 without glue in the joints of piece 1246 and walls 1250, 1251 in piece 1249 as shown in the picture. Glue them after you have checked the correct position. Warning: the two structures are not the same; ensure to correctly orient the pieces.

742

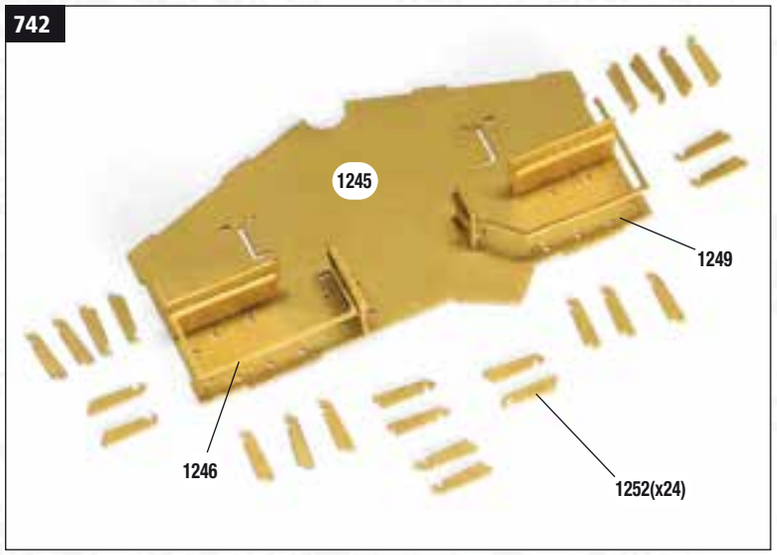

742 Glue the two structures you just assembled in the joints on platform 1245. Then prepare twenty-four pillars 1252 which you can find on sheet 1559.

743

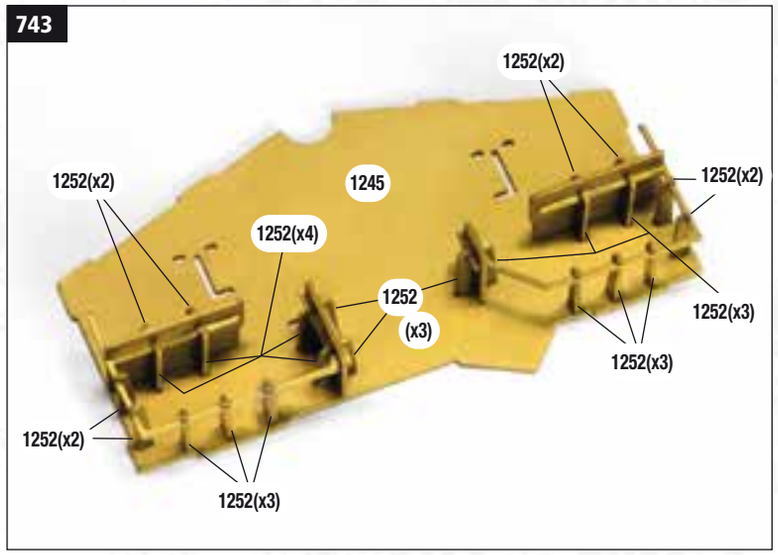

743 Insert vertical pillars 1252 into the joints of platform 1245 and glue 13 of them on the left rack and 11 of them on the right rack.

744

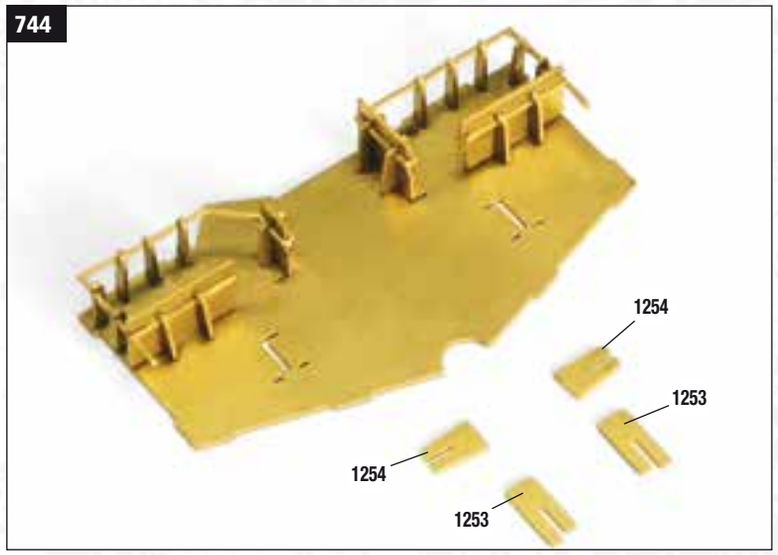

744 Rotate the platform and prepare front pieces 1253, 1254 (sheet 1559).

745

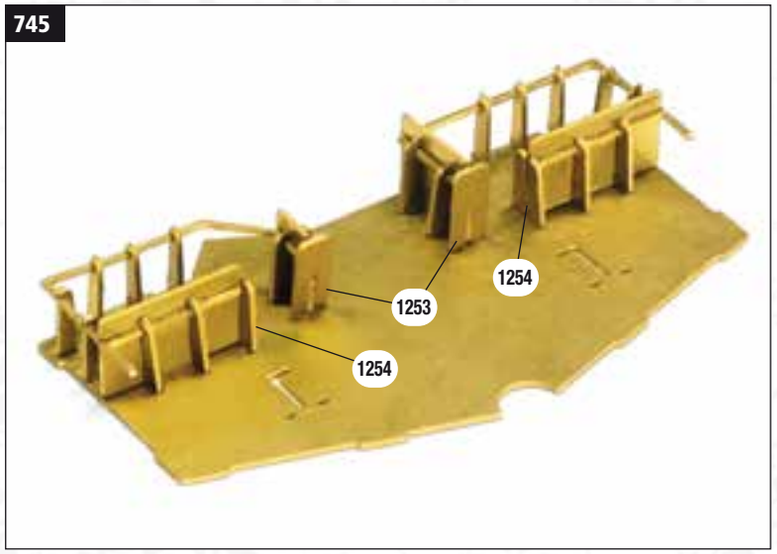

745 Glue the four pieces 1253 (x2) and 1254 (x2) in the joints at the head of the racks.

746

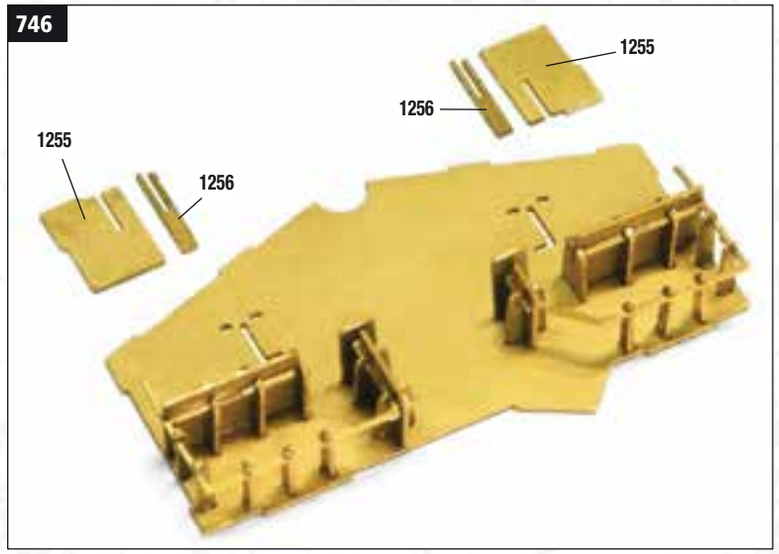

746 Rotate the structure again and prepare pieces 1255 (x2) and 1256 (x2) (sheet 1559) which will be assembled in the other joints which are still free on the platform.

747

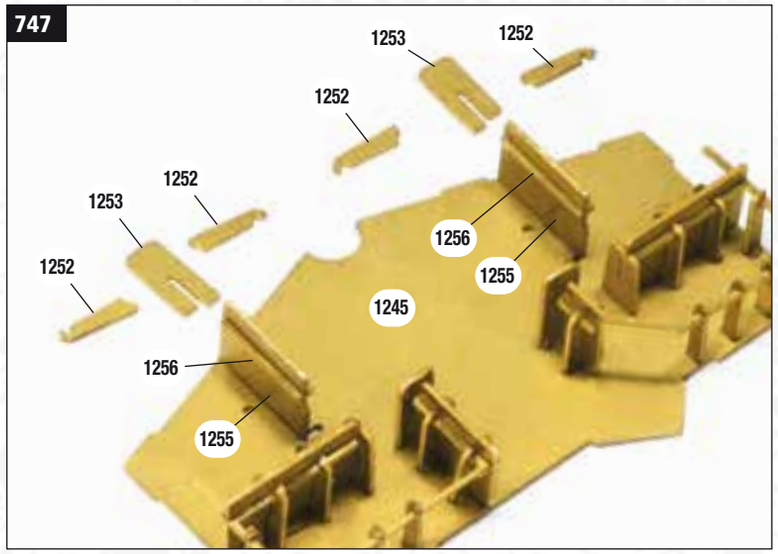

747 Insert the two walls 1255 into the joints of pieces 1256 and into the joints on platform 1245; then glue. Prepare the other four pillars 1252 and two other front pieces 1253 which you can always find on the same sheet 1559.

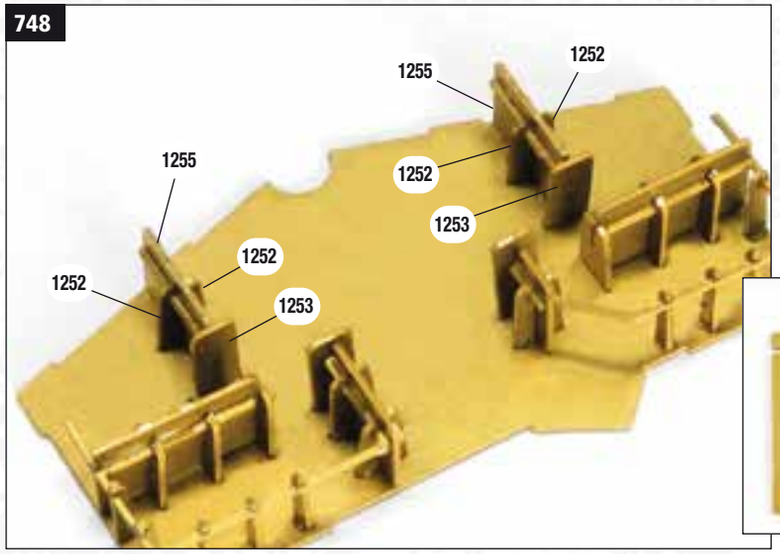

748 Glue on each of the two walls 1255, two vertical pillars 1252, and a front piece 1253, as shown in the picture.

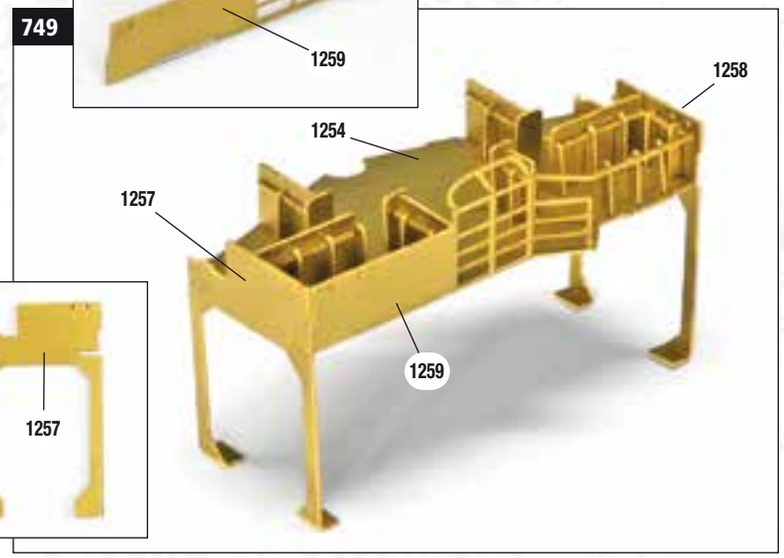

749 Rotate the structure and prepare the side walls with support feet 1257 and 1258 (sheet 1559). Bend the lower ends of sides 1257 and 1258 inwards to 90°, along the engraved marks; then glue them to the sides of the structure using the joints. bend the railing of wall 1259 as shown in detail and glue it to the edge of platform 1254.

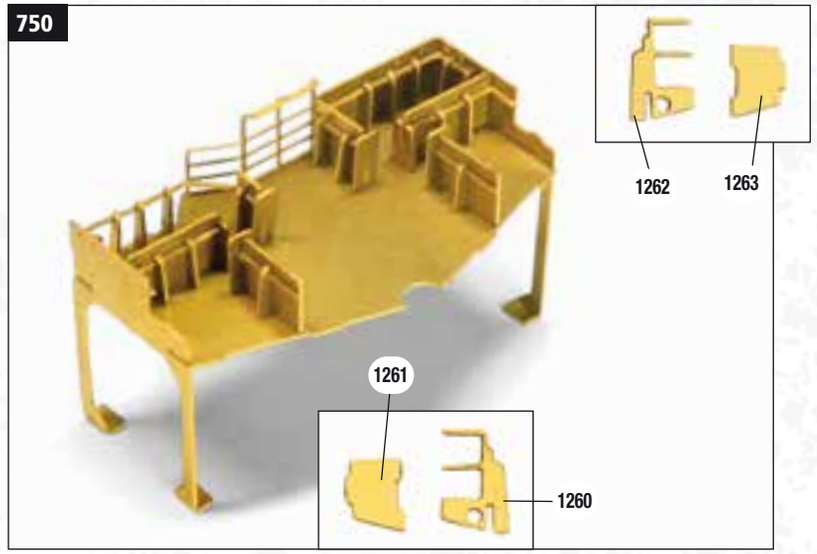

750 Rotate the structure and prepare pieces 1260, 1261, 1262, 1263 always from the sheet 1559, in order to create the two side platforms.

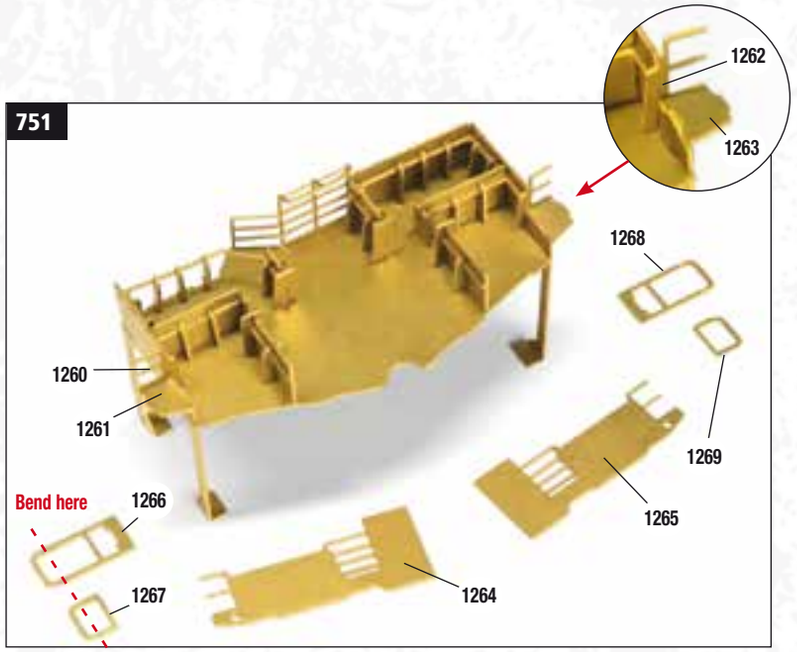

751 Glue the first two pieces 1260, 1262 to the side walls of the signal station as shown. Later, also fixed the small platforms 1261, 1263. Remove the two walls 1264, 1265 and the railings for the side platforms 1266, 1267, 1268, 1269 from sheet 1559.

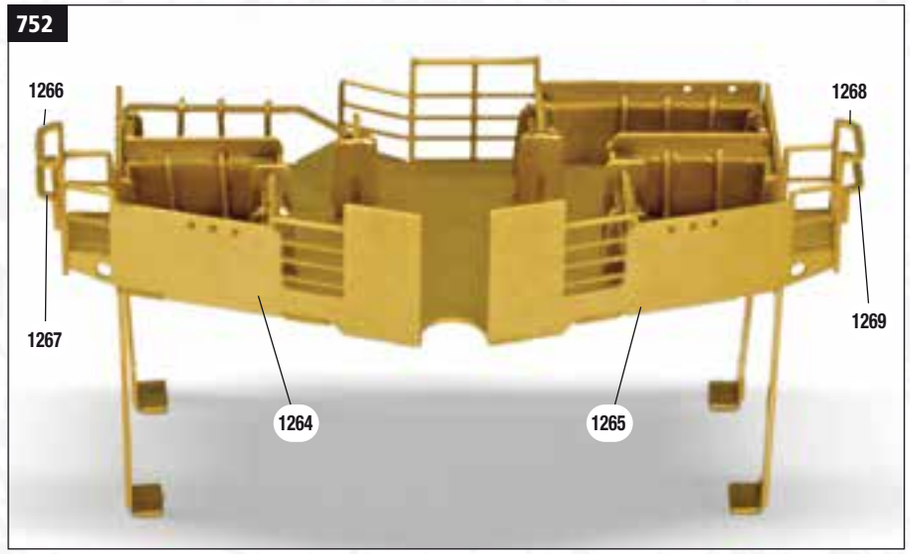

752 Insert the two front walls 1264, 1265 into the joints and glue them. Bend the railings 1266 and 1268 outwards to 90°, in the engraved marks and glue them to the side platforms. Subsequently, always bend the other two railings 1267, 1269 outwards and glue them in the position shown in the picture.

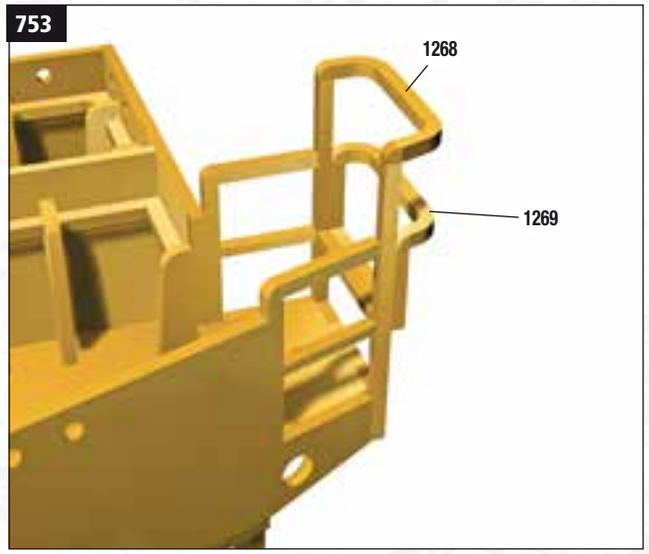

753 The picture above shows in detail the assembly of the side platform of the signal station.

754

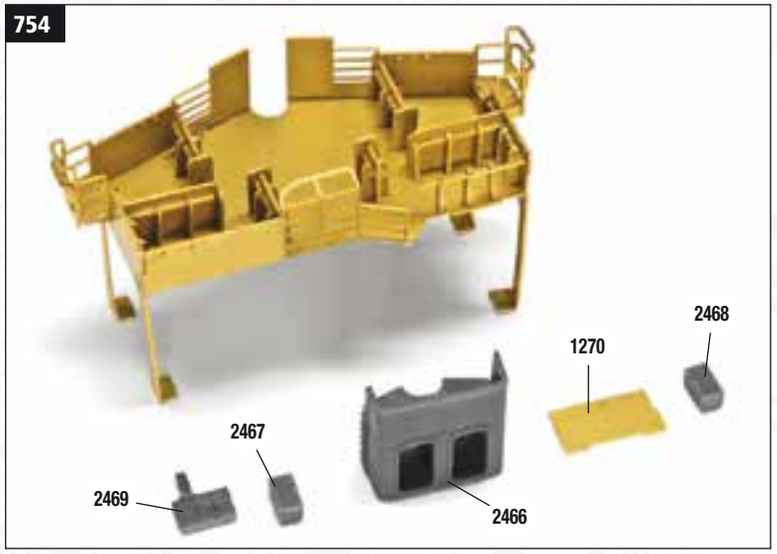

754 Remove accessories 2469, 2467, 2466, 2468 from sprue P25, watchtower P48 and wall 1270 from sheet 1559.

755

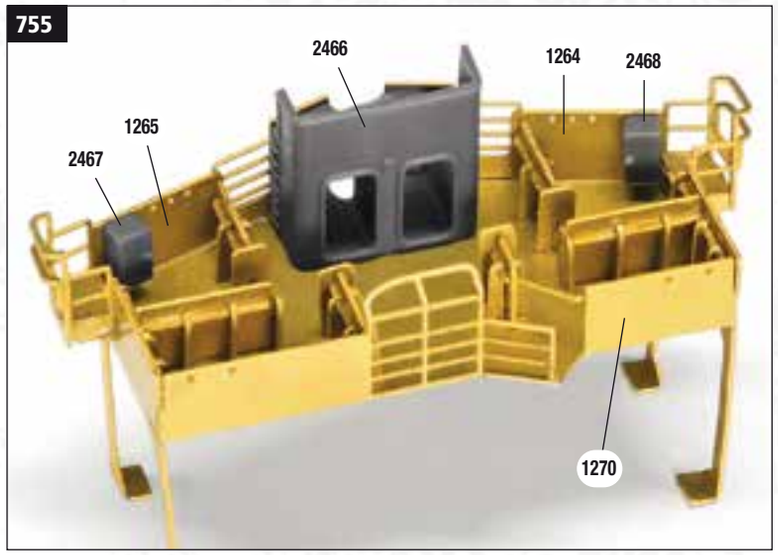

755 Following the picture above, fix front wall 1270 to the side of the platform; the two cabinets 1247, 1248 inside walls 1264, 1265 and watchtower 2466 in the centre of the platform.

756

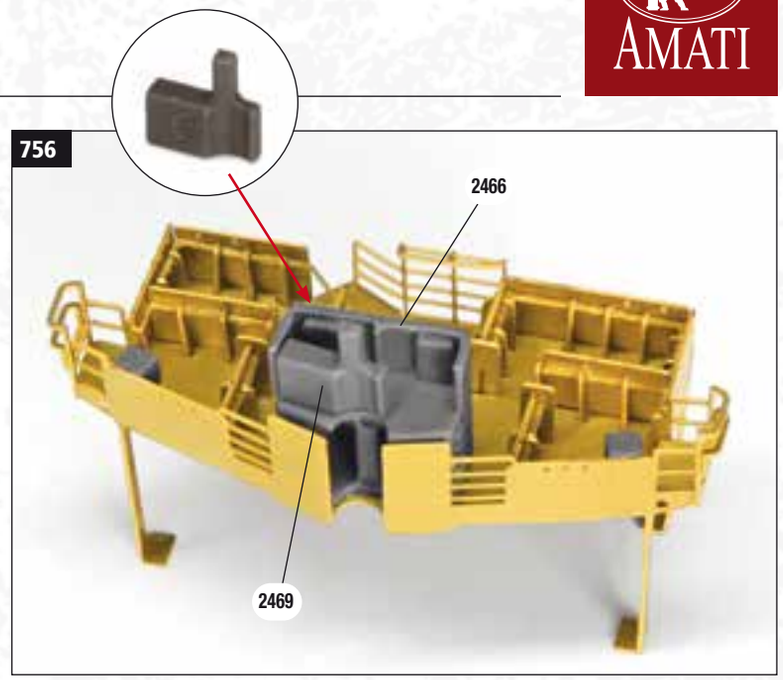

756 The picture above shows a view of the watchtower from the opposite side, aligned with the side walls and the semicircular profile on the platform; it determines the position of the mainmast. Fix piece 2469 over the watchtower as shown in the picture.

757

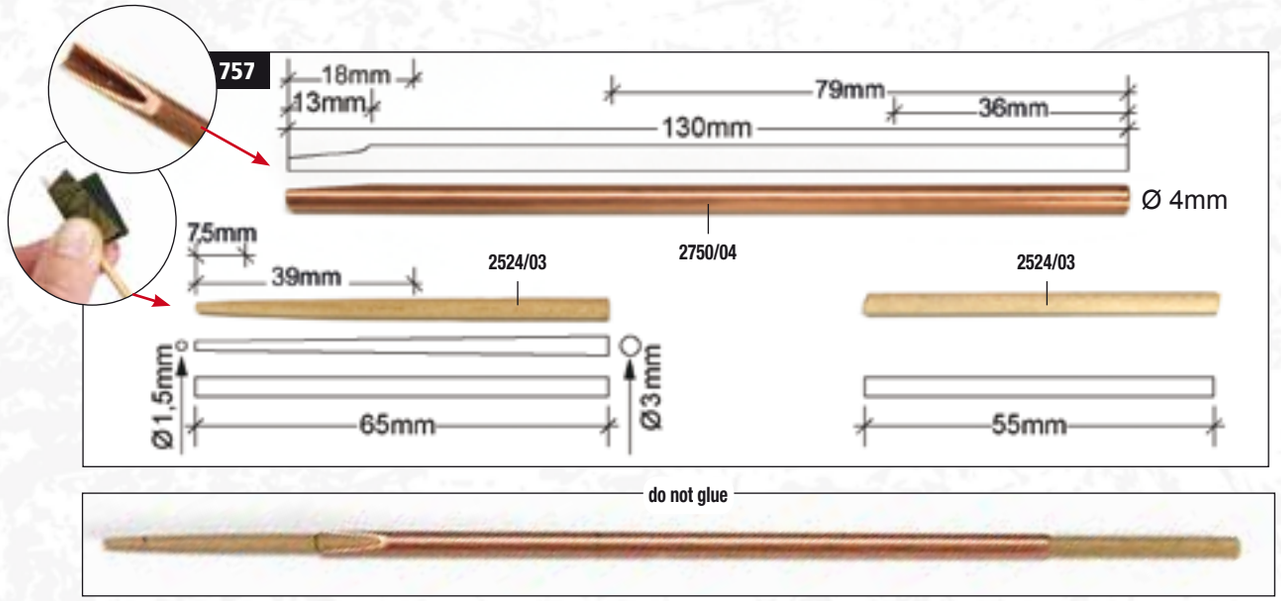

757 Now move on to the assembly of the mainmast. Cut the 2750/04 copper tube (Ø 4mm) to a length of 130mm and with a file, sand one end in order to obtain the shape shown in the photo and in the drawing. Cut two 65mm and 55mm long sections of the 2524/03 wooden dowel (Ø 3mm); then, with abrasive paper taper and gradually round off one end of the 65mm bar, so that its diameter measures 1.5mm. Mark in pencil on the copper tube the position of the accessories that you will have to assemble on the spindle of the mast and on the section of 65mm wooden dowel mark the dimensions shown in the drawing. Try inserting without glue the 65mm wooden dowel in the upper hole of the copper tube, up to the lower mark and the 55mm dowel section in the lower hole; always without gluing.

758

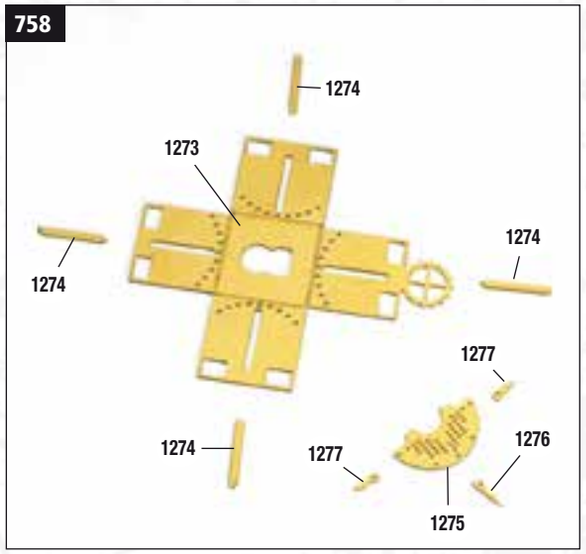

759

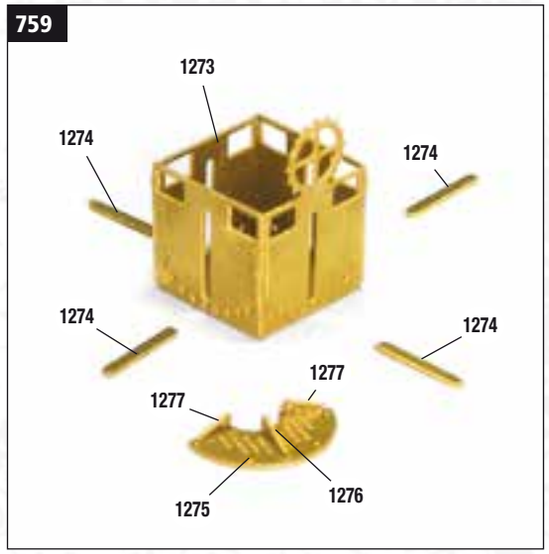

758-759 Remove the pieces shown in the picture for the assembly of the crow's nest and the platform of the mainmast from sheet 1559. Lift the four side walls of crow's nest 1273 upwards along the engraved marks; then glue them together. Insert the three shelves, 1276 central and 1277 (x2) on the sides of platform 1275 and fix them as shown in the picture.

861

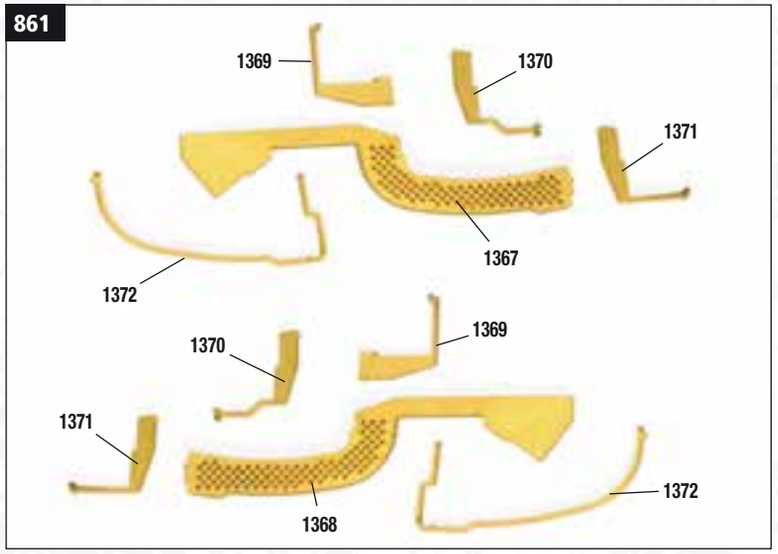

861 Now continue with the preparation of the aerator platforms. Remove from sheet 1560 platforms 1367 and 1368 with the relative accessories, which will be assembled on the Cesar barbette tower.

862

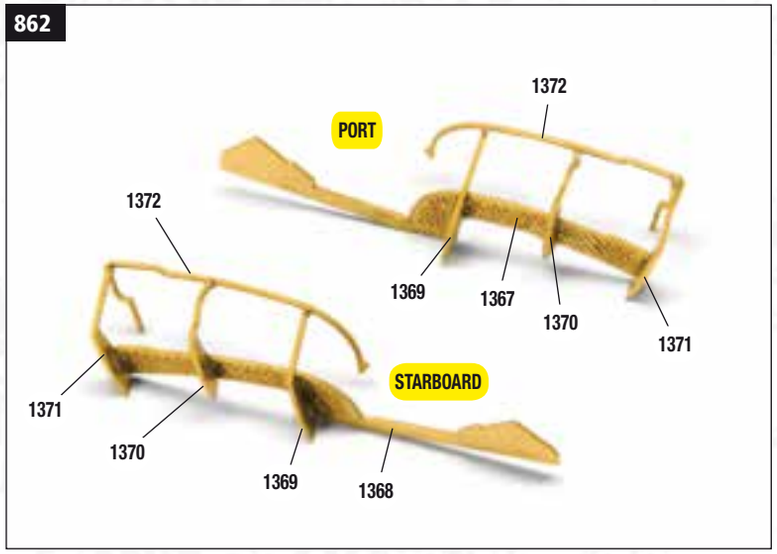

862 Set up and glue the platforms with the relative shelves and railings as shown in the picture. Use the joints on the shelves to align the pieces. Platform 1367 must be assembled on the port side; while platform 1368 on the starboard side. Observe the following pictures and perform tests without glue directly on the model. The ends without railings of gangways 1367, 1368 will be inserted in support on the forecastle deck.

863

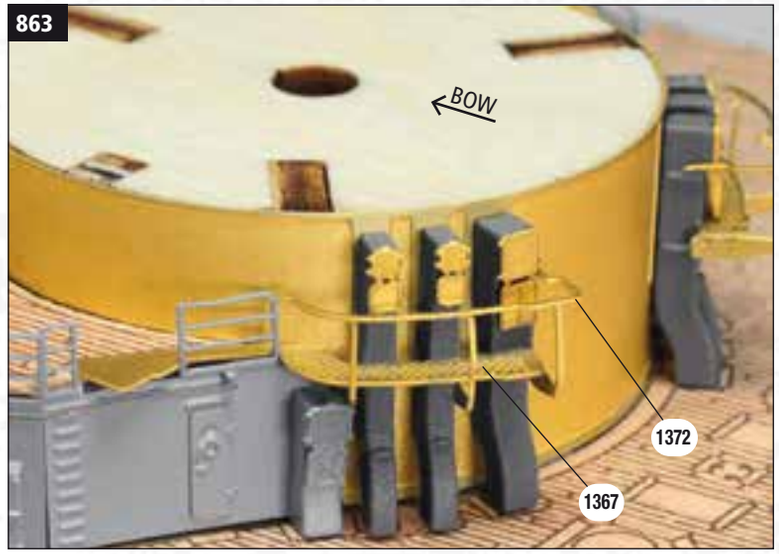

863 Once you have identified the correct position, glue gangways 1367 and 1368 to the aerators of the barbette but not yet to the deck cladding; you will need to remove the barbette with its accessories for the final colouring.

864

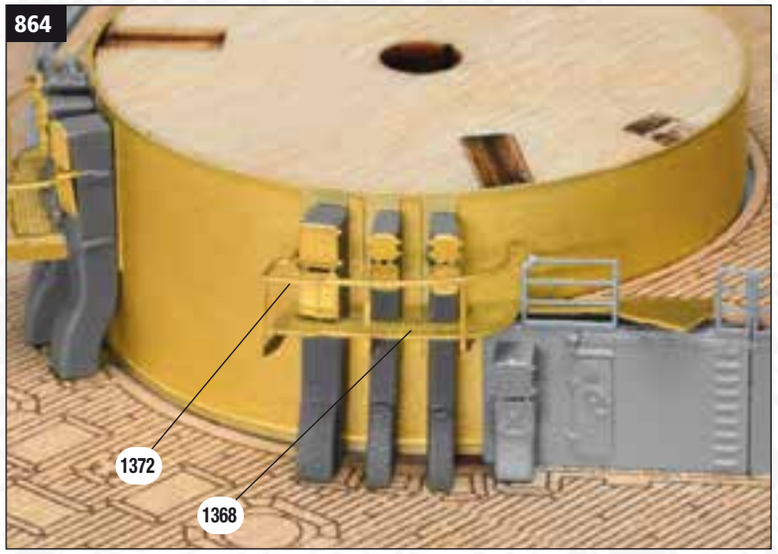

864 The picture above shows the assembly of the starboard gangway 1368.

865

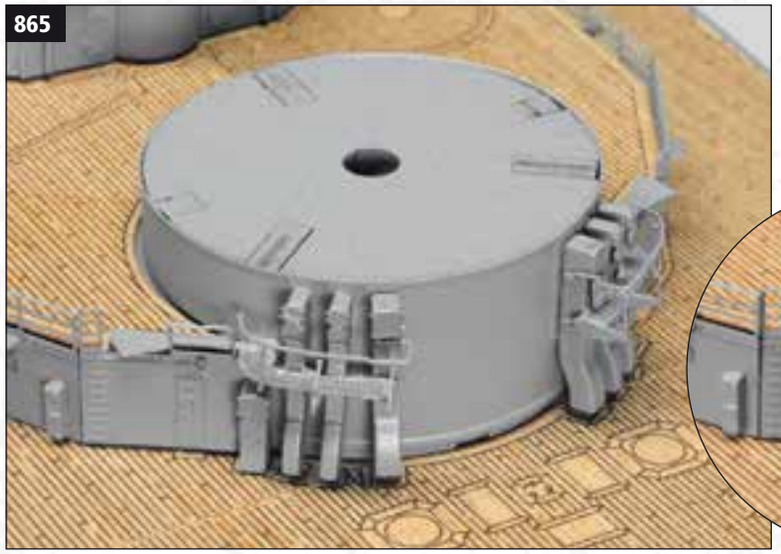

865 At this point, you can remove the barbette from the deck and paint it entirely with Ral 7001 grey spray. When the colour is dry, fix the barbette to the deck cladding.

866

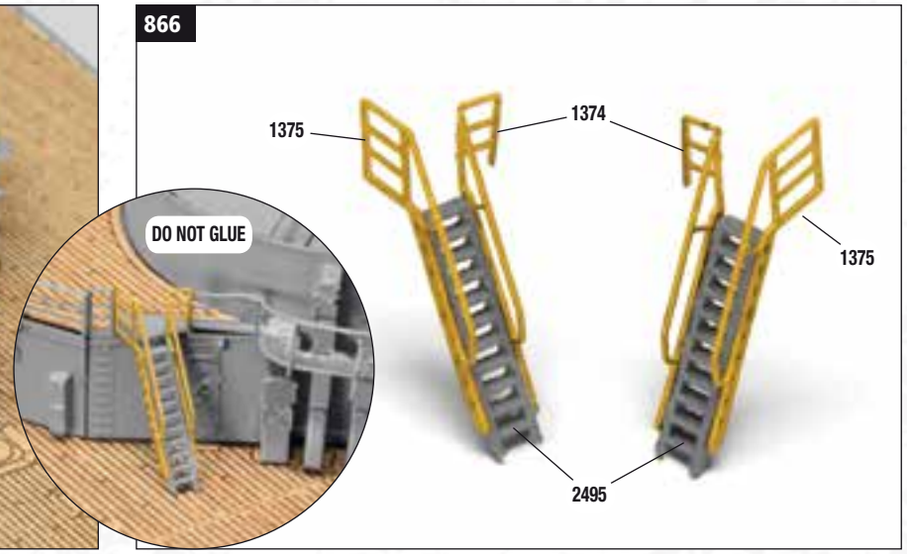

866 From plastic ladders 2495, sprue P21, cut two sections of 11 steps each. Bend railings 1374 (sheet 1560) to 90° inwards. Push and glue the pillars with railing 1374 (x2), 1375 (x2) to the sides of the ladders as shown in the picture. Try to position, without gluing, the ladders at the edge of platform 1367 for the port side (see detail) and 1368 for the starboard side. Set these accessories aside, which will be fixed to the model after the colouring steps.

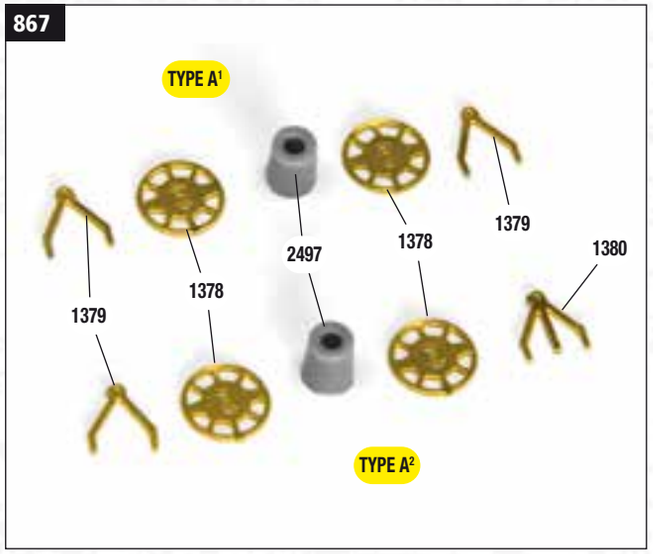

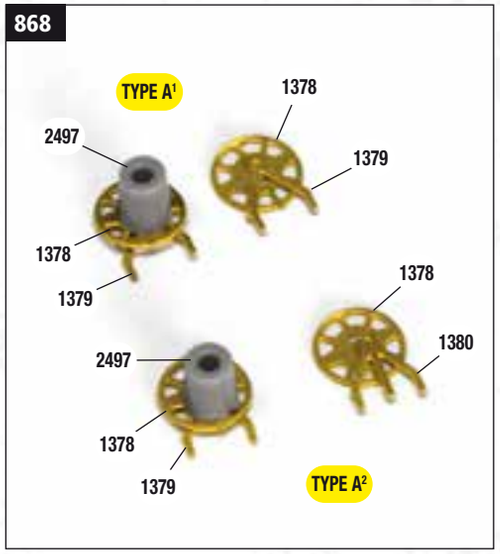

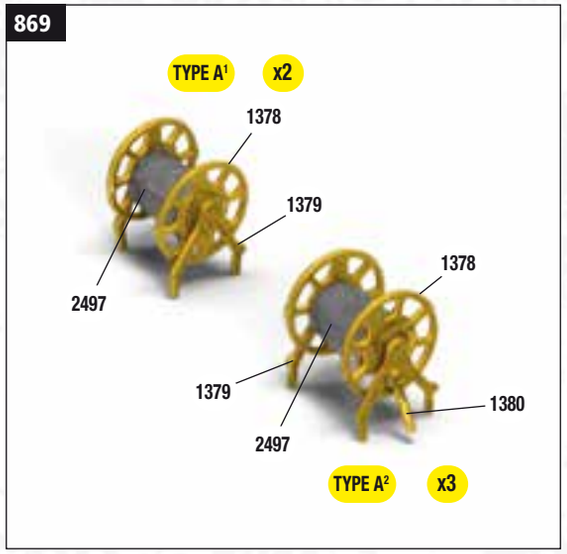

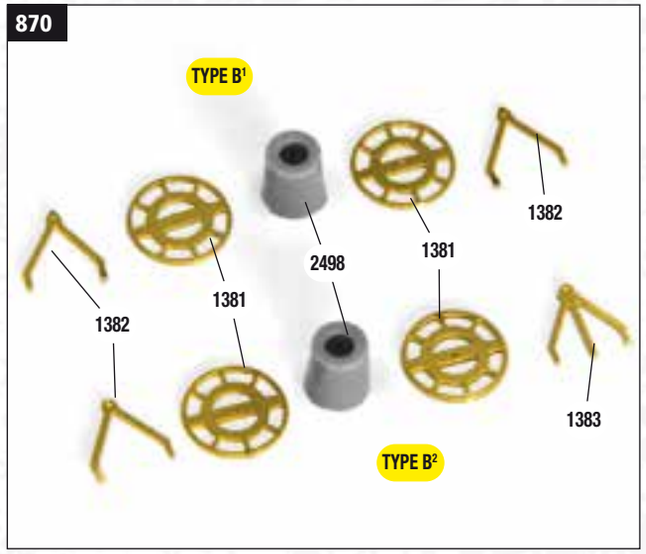

867 Now prepare the fire hose reels. There are three sizes and with two different types of supports: two or three feet. Detach from the sprue P12 two small drums 2497 and from sheet 1560 four discs 1378, three supports with two feet 1379 and one with three feet 1380. With these elements, you prepare the smaller reels of type A¹ with two-feet supports and A² with a three-feet support.

868 Glue supports 1379, 1380 to discs 1378, aligning the holes. Glue drums 2497 on the inside of pair 1379-1380 aligned in the centre of the disc.

869 Glue the inner side of type A¹ 1378-1379 pair and type A² 1378-1380 pair to the opposite side of each drum 2497. Repeat the assembly and prepare a total of two A¹ type reels and three A² type reels. Temporarily keep them aside.

870 Continue with the second type of reels, the medium-size one: B¹ with two-feet supports (1382) and B² with three-feet support (1383). Remove the pieces represented in the picture which you can find on sheet 1560 and the plastics on sprue P12.

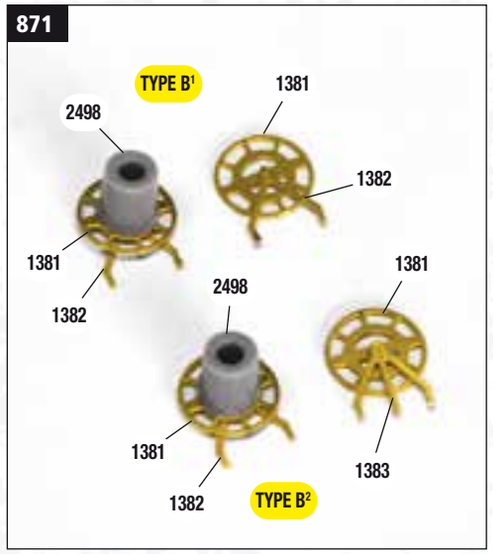

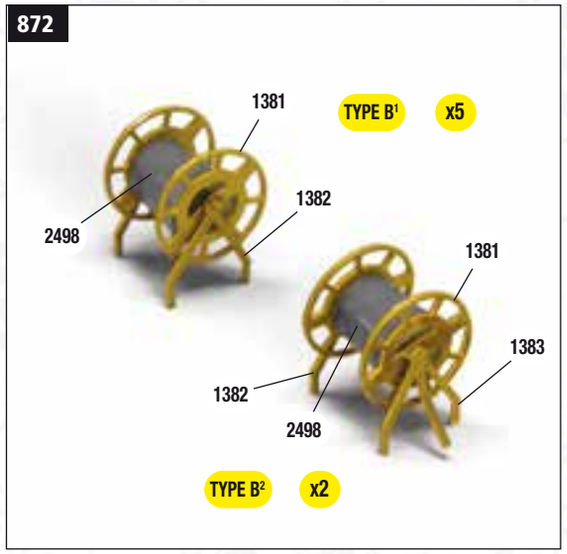

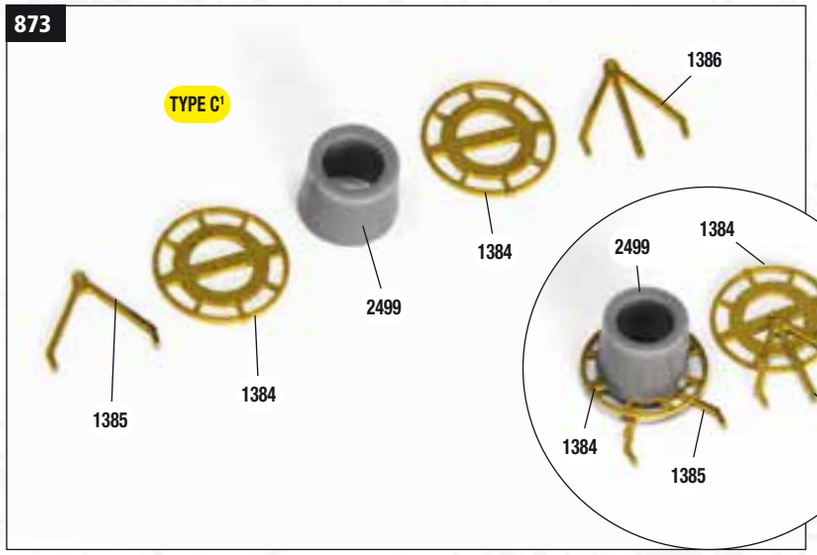

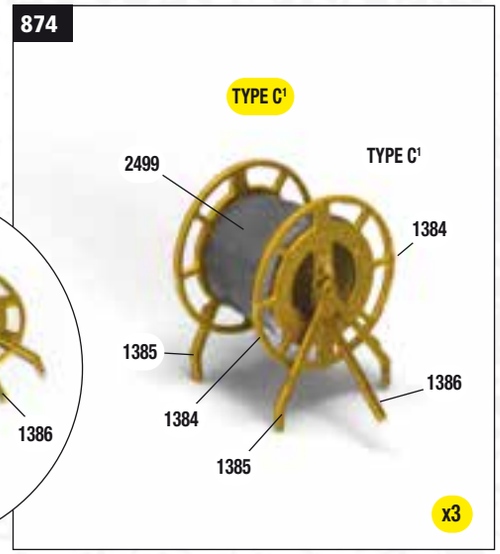

871 Couple supports 1382, 1383 to the respective discs 1381, fix each drum on the inside of a pair 1381-1382.

872 Fasten pairs 1381-1382 type B¹ and 1381-1383 type B² on the opposite side of the drums. Repeat the assembly and prepare a total of five type B¹ and two type B² reels. Temporarily keep them aside.

873 In the same way, prepare the third type of reel C¹ formed, however, by a single type of three-feet support (1386). Remove the pieces shown in the picture, from the same sheet and from the same sprue. Couple and glue the supports to the outer walls of the discs and the drums to the inner walls.

874 Repeat the assembly and prepare a total of three type C¹ reels. Temporarily keep them aside.

938

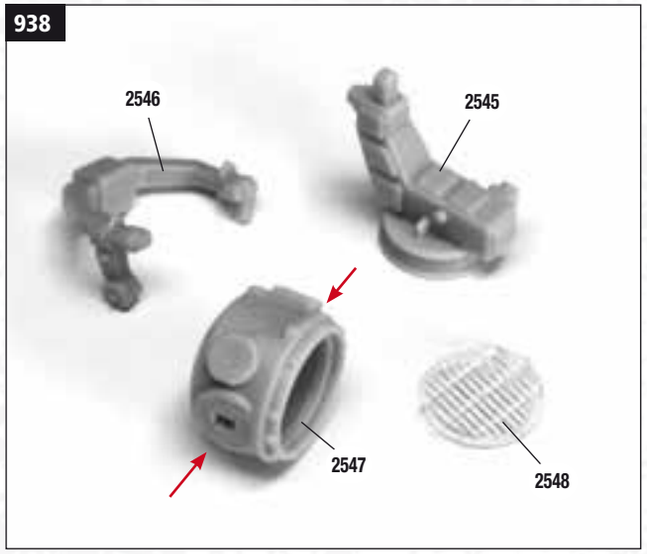

938 Remove from sprues P13, P20 base 2545, support 2546, dish 2547 and from sprue P18 the transparent glass 2548 of one of the five searchlights that you will have to prepare in these assembly steps.

939

939 Assemble support 2546 in the side holes of dish 2547; then glue.

940

940 Insert the dish with support as shown in the picture in the upper dowel of base 2545 and glue.

941

941 Before gluing the transparent glass to the dish, prepare four more searchlights with base 2545, support 2546 and dish 2547 and paint all five of them in Ral 7001 grey. Once dry, you can fix the plates to the searchlight dishes.

942

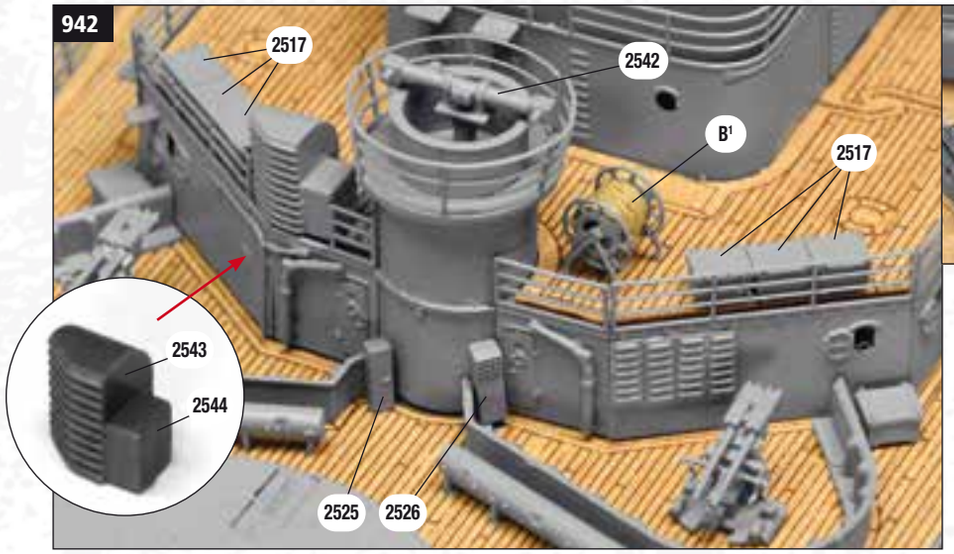

942 Now that you have prepared several accessories, you can begin to fix them on the decks of the stern superstructure. Before gluing them, you have to paint the elements still to be coloured in Ral 7001 grey. Once dry, you can glue cabinet 2525 and aerator 2526 (sprue P25) to the forecastle deck against the turret wall in the position shown. Move to the upper deck and glue six containers 2517 (P26), three on each side, rangefinder 2542 (P27) on the turret, a B¹ cable reel to the side of the turret, and aerators 2543-2544 (P25) on the edge of the deck. Orient all these elements as shown in the picture and identify their position drawn on the deck claddings.

943

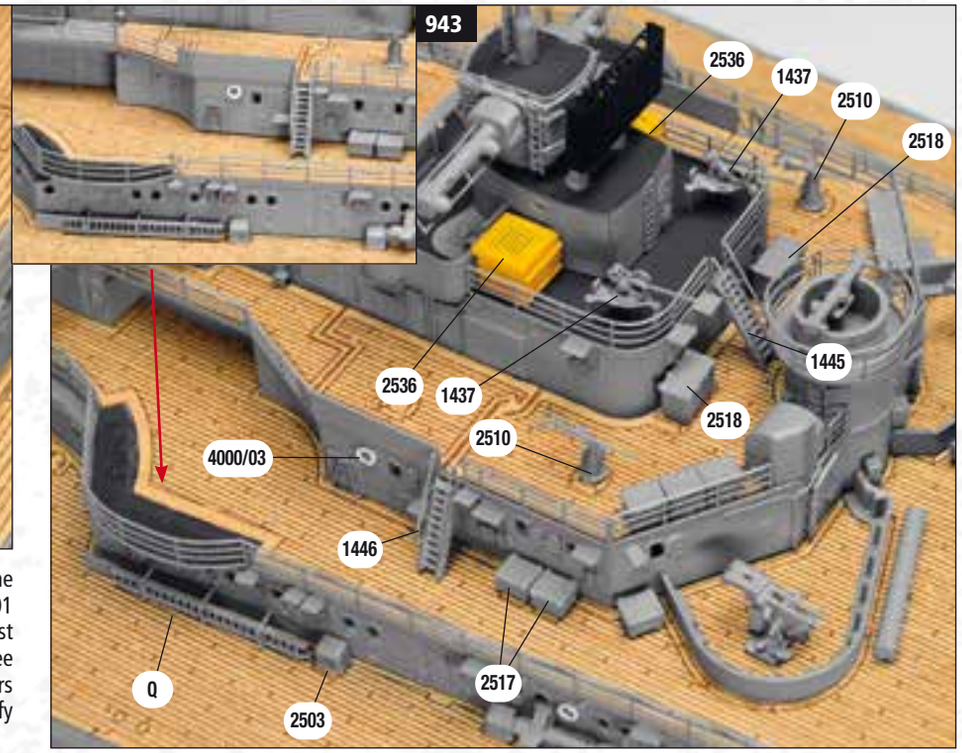

944

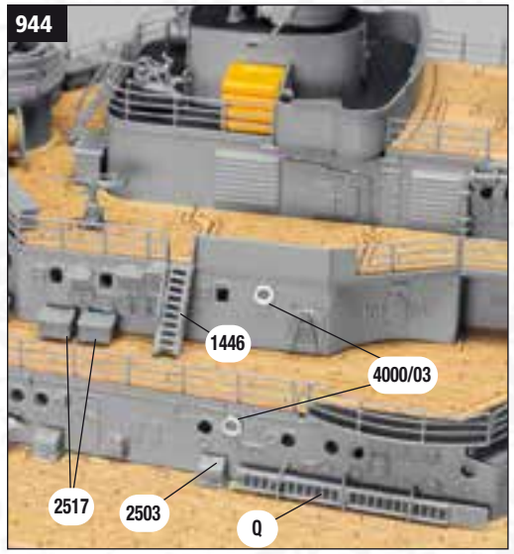

943-944 Glue ladder 1445 (step 930), two containers 2518 (P26), the two piles of life rafts 2536 (step 920), two cannons 2510 and two 1437, one on each side. Then move to the side walls of the 1st and 2nd level and glue the Q ladders, two containers 2503 (step 883) and four containers 2517 (P26), two ladders 1446 and three life jackets 4000/03 one on the port side and two on the starboard one.

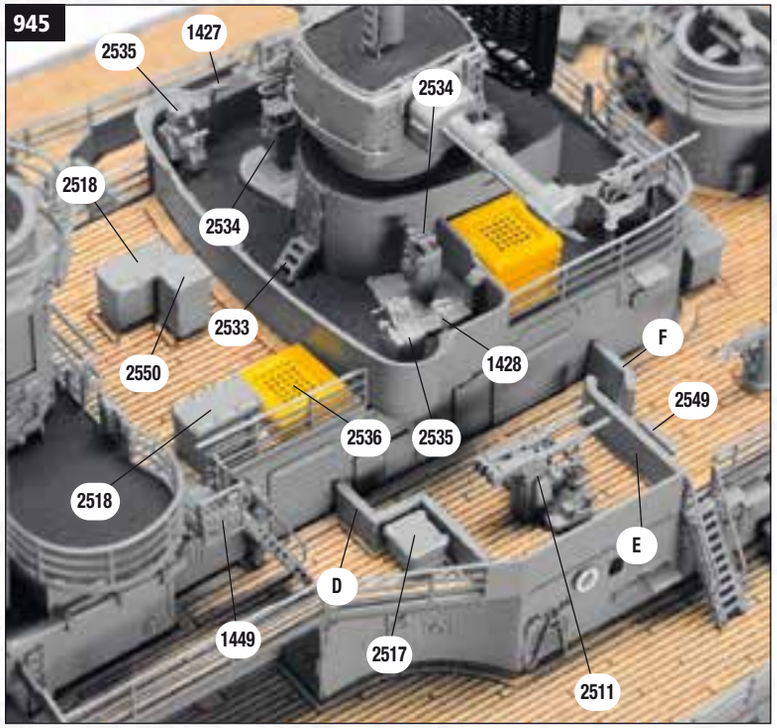

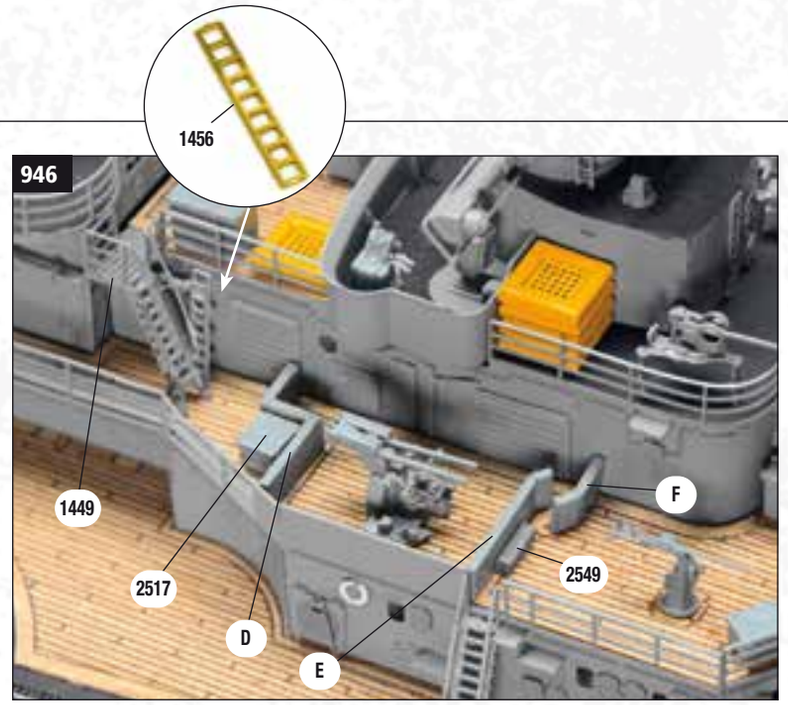

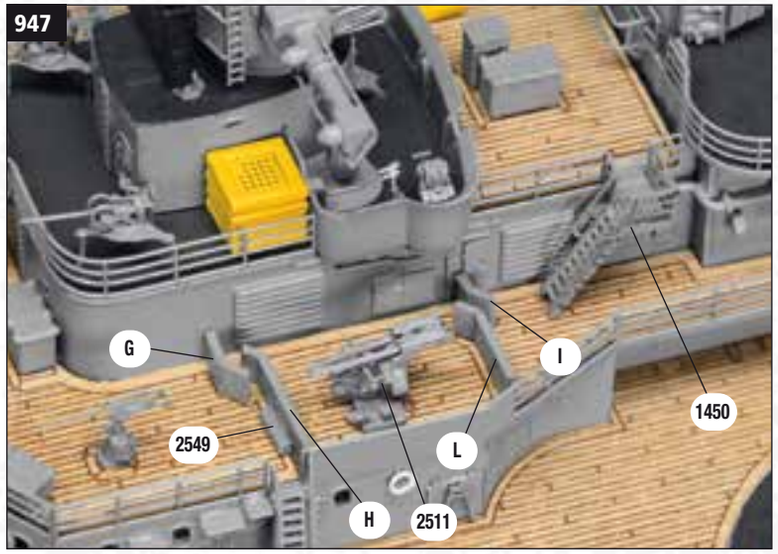

945-946-947 Move to the bow and after painting the pieces glue the shatterproof walls D, E, F on the starboard side, container 2517 against wall D, piece 2549 (P25) against wall E, cannon 2511, ladder 1449 (step 935) and ladder 1456 (sheet 1561) against the starboard wall of the deckhouse. Move to the port side and in the same way glue walls G, H, I, L, piece 2549 (P25) against wall H, cannon 2511 and ladder 1450. Identify the location of these accessories drawn on the deck plank floor. Take two sighting devices 2535, two sighting columns 2534, and three-step ladder 2533 (step 914) and glue them to the bridge in front of the control station as shown in picture 945. Glue binoculars 1427 to the side walls of the bridge. Move to the deck and continue preparing with containers 2518 (x2) (P26), piece 2550 (sprue P25) and single life raft 2536.

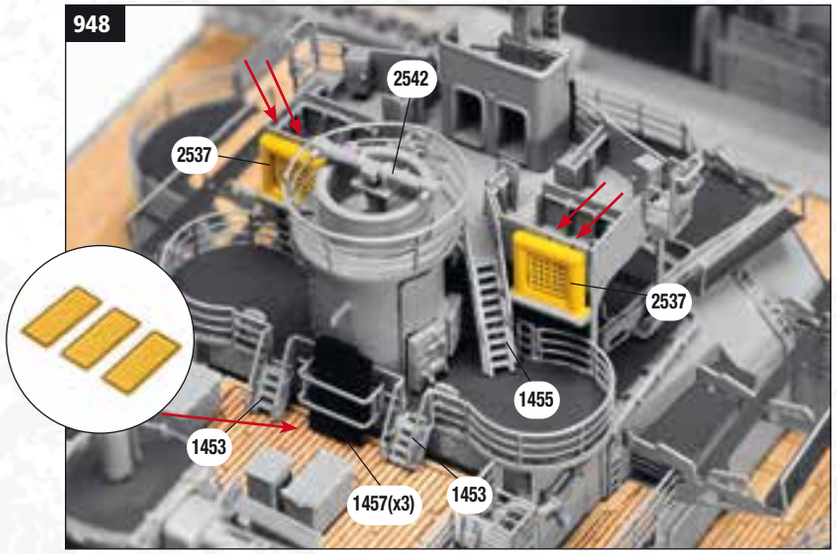

948 Paint in Ral 7001 grey all the accessories that you will assemble on the signal station and on the platform of the searchlight of the rear superstructure. Follow picture 948 and fix ladder 1455 (step 937) to the signal deck oriented with the descent on the searchlight platform. Glue the two life rafts 2537 to the side walls of the signal station (leave the upper holes in the walls free, red arrows); two ladders 1453 (step 936) to the searchlight deck oriented as shown in the picture; three plates 1457 (sheet 1561) painted in matt black and glued into the rack of the platform and rangefinder 2542 (sprue P27) on the turret.

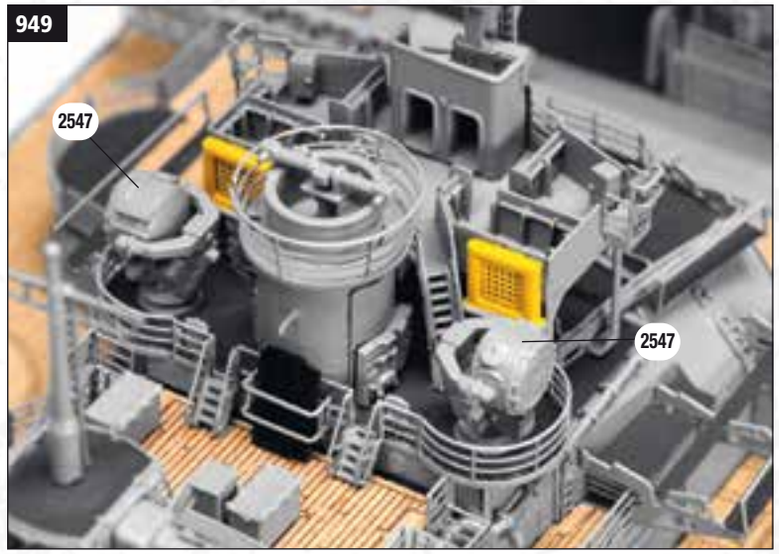

949 Take two searchlights 2547 prepared in step 941 and glue them to the sides of the searchlight platform facing the outside of the ship.

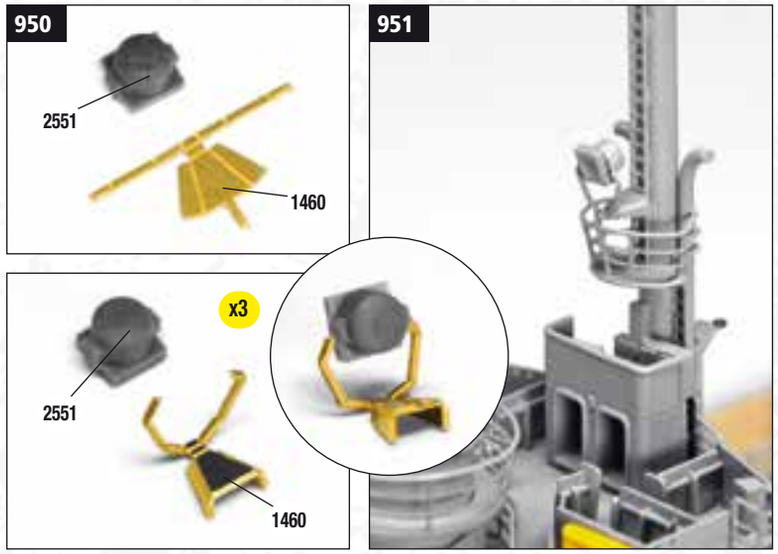

950-951 Remove support with shelf 1460 from sheet 1566 and searchlight 2551 from frame P25. Bend the brackets and the two sides of the shelf as shown in the picture. Glue searchlight 2551 to the shelves. Repeat the assembly and prepare a total of three searchlights. Paint them in Ral 7001 grey and glue one to the ladder of the foremast in the position shown in picture 950.

967
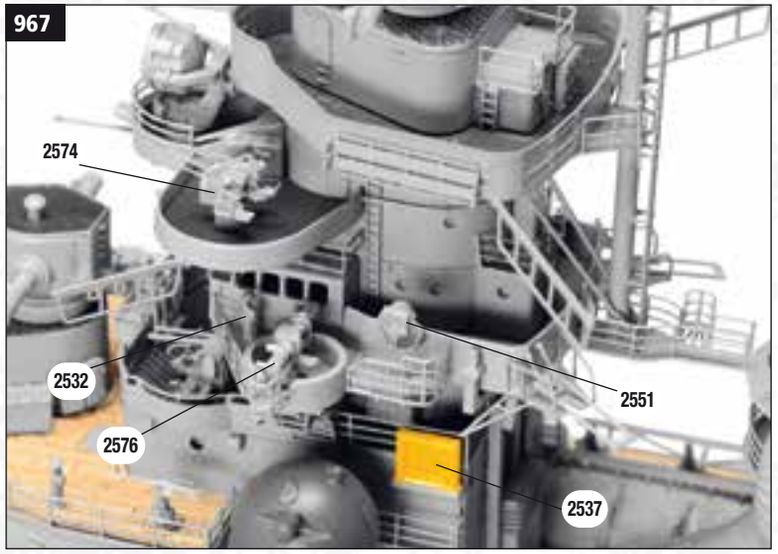

967 The picture shows the view of the admiral's bridge and the searchlight deck with the positioning of accessories 2532, 2576, 2551, 2574 on the port side of the model.

968
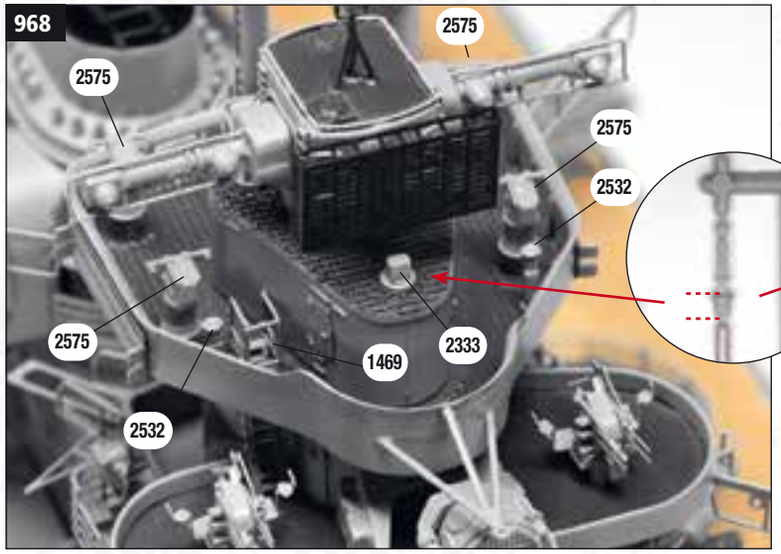

968 Move to the foremast foretop gallery and glue ladder 1469 step 965, two radio compasses 2532 and four gunsight telescopes 2575 (step 963). Move to the central station floor and glue three searchlights 2333 that you will have to separate from sprue P36 with a cutter. Also observe the following picture to identify the correct position and orientation of these elements.

969
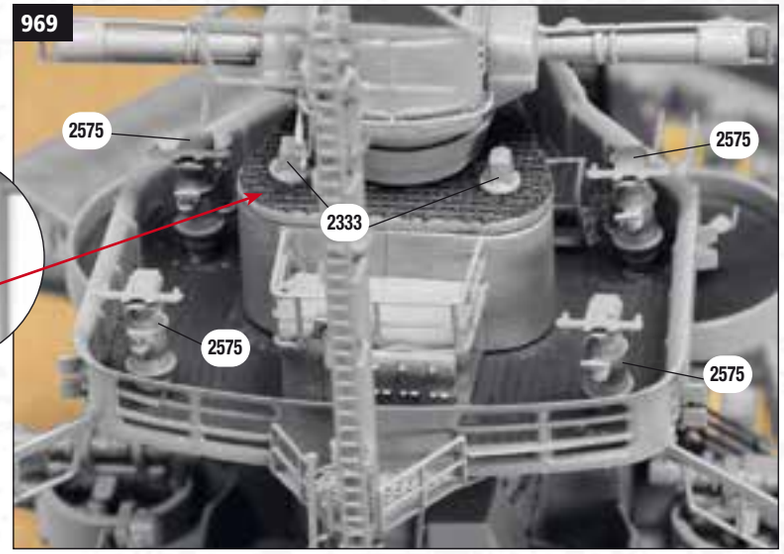

969 The picture shows the view from the stern of the foremast tunnel and the central shooting direction station with the positioning of accessories 2575 and 2333.

970


970 Now equip the funnel platform with two searchlights 2547 and two cannons 2510 (step 888). Orient these elements as shown in the picture.

971
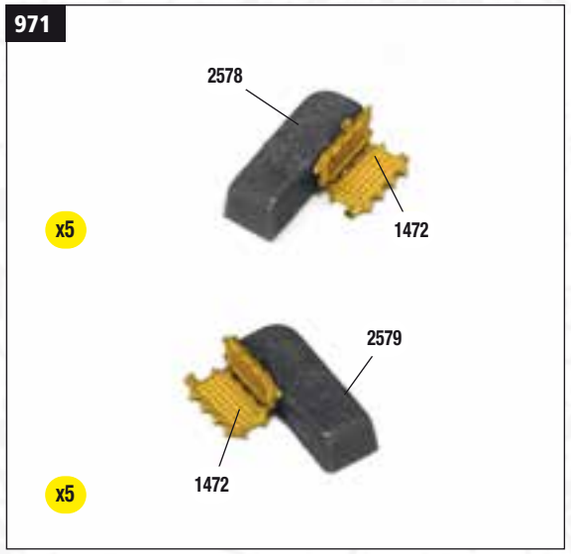

971 Remove ten pieces 2578 and 2579 of the aerators from sprue P25 and ten gratings 1472 from sheet 1561. Bend the gratings to 90° and glue them to the side wall of columns 2578, 2579. Prepare a total of five aerators for the starboard side and five for the port side.

972
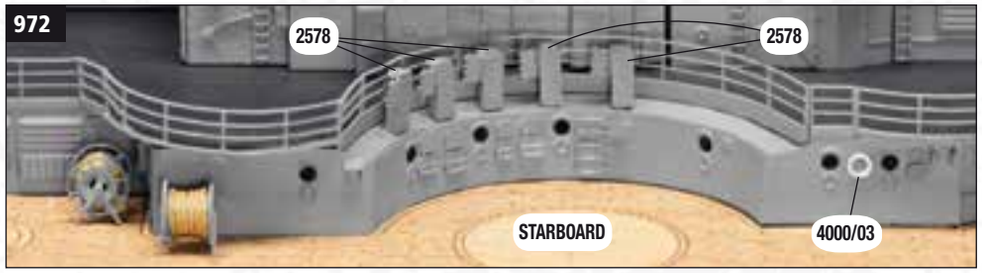

973
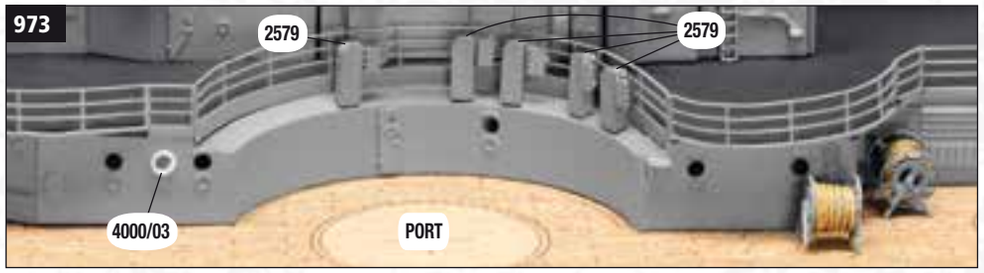

972-973 With Ral 7001 paint, colour the ten aerators completely. Once dry, glue the five aerators 2578 to the redoubt of the heavy weaponry tower on the starboard side of the bow superstructure. Identify their position by referring to the accessories on the arched wall below. Rotate the model and in the same way glue the other five aerators 2579 to the redoubt of the heavy weaponry tower on the port side. Also in this case, you can use the portholes of the underlying wall as a reference to identify the position of the aerators on the redoubt. Take two white ring buoys 4000/03 (step 882) and glue one on each side in the position shown in the picture.

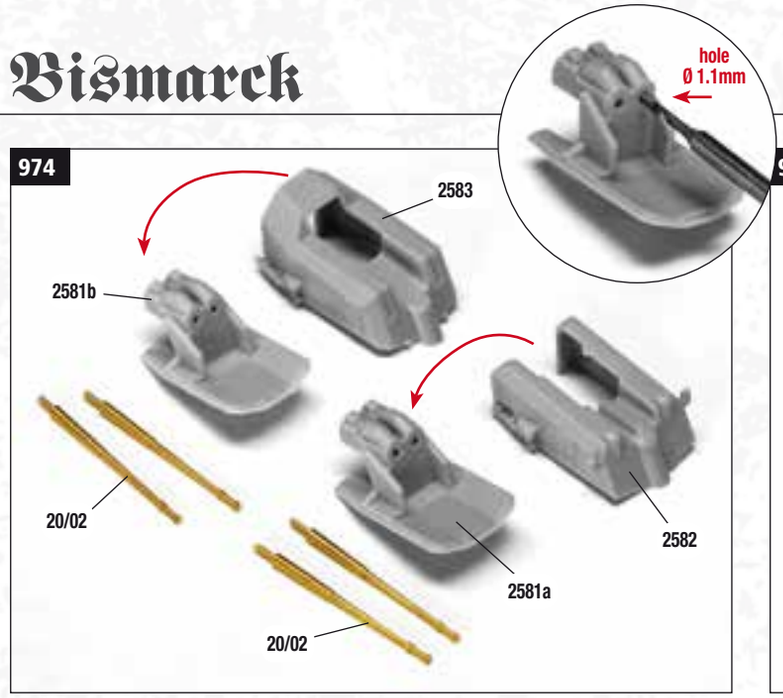

974 With the next assembly steps you will have to prepare the 10.5 cm. front heavy anti-aircraft guns (2581a, 2582 frames P14, P15) and the 10.5 cm rear heavy anti-aircraft guns (2581b, 2583 frames P16, P17) which will be fixed on the decks of the superstructures. To start, drill two holes at the bases of each carriage for the insertion of barrels 20/02 as shown in the detail.

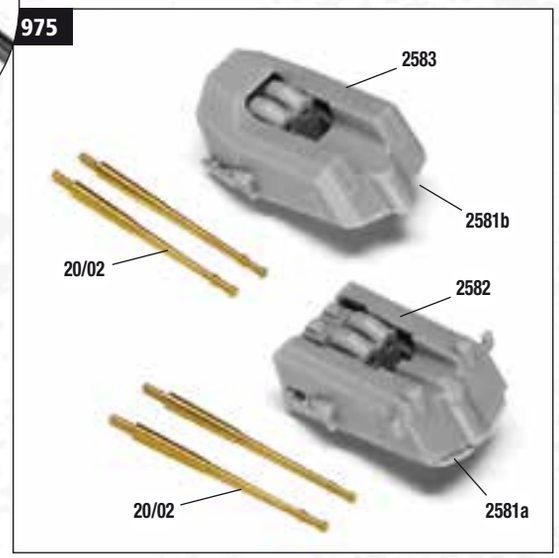

975 Join caps 2582 and 2583 to the respective bases 2581a and 2581b; then glue.

976 Insert the barrels in the pair of holes of each cannon, fix them with the glue in a parallel position. You will have to prepare a total of eight cannons: four front 2582 and four rear 2583; therefore replicate the assembly from step 974 to step 976 and assemble eight cannons in total.

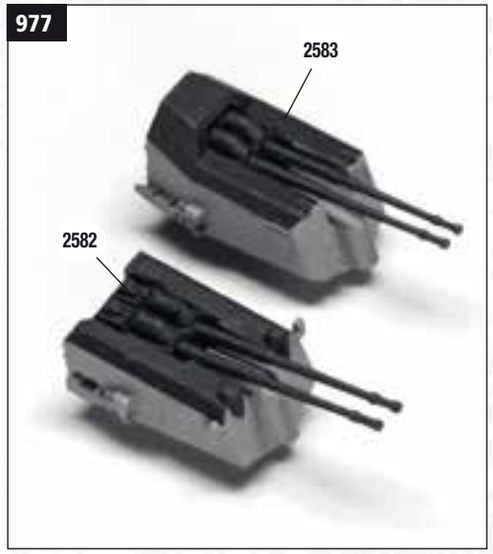

977 Now you can colour the entire surface of the eight cannons with Ral 7001 paint. Let the rods and the upper part of the caps dry well and brush with Ral 7024 paint, following the colouring areas shown in the picture above and in the following one.

978 The picture shows the colouring areas of the cannons seen from another angle. Temporarily keep the eight newly assembled and painted cannons aside.

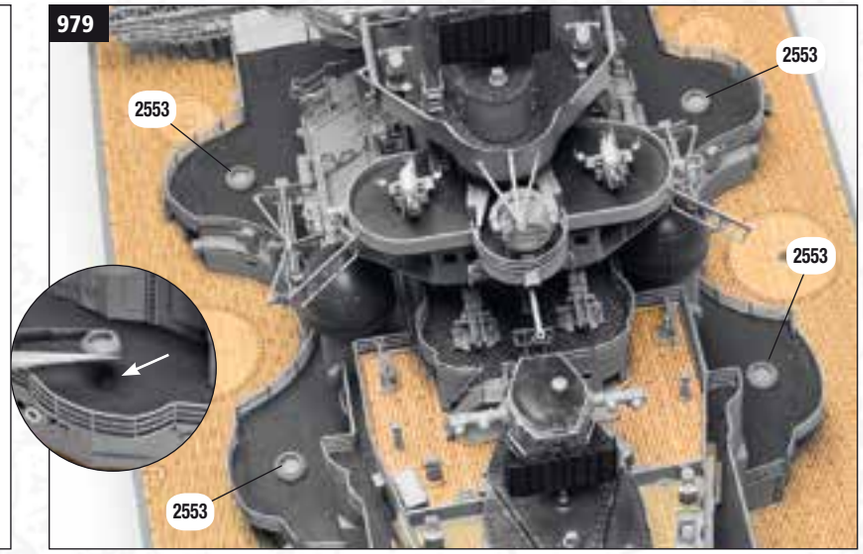

979 Detach the eight circular bases 2553 for the heavy anti-aircraft guns from sprue P25. Fix four to the lower deck of the bow superstructure in correspondence with the four holes drilled in steps 309, 311 of the first instructions manual.

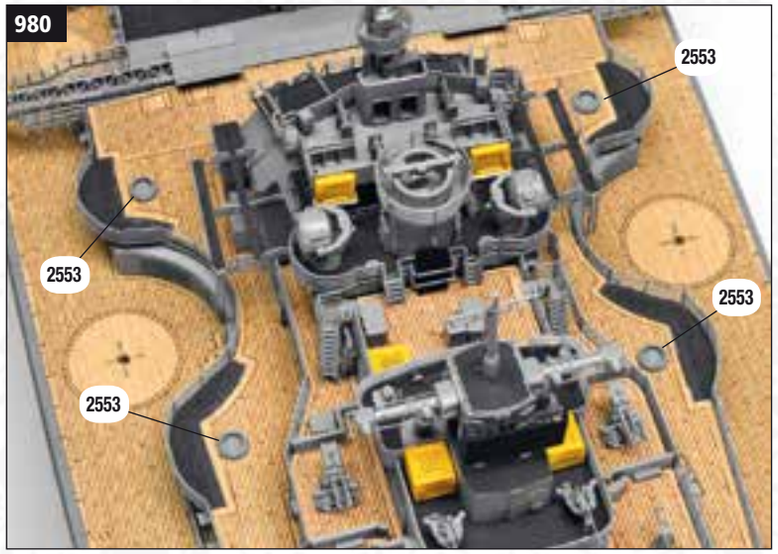

980 Then move to the stern superstructure and fix the other four bases 2553 (P25) to the lower deck aligned with the holes drilled in step 794 of these assembly instructions.

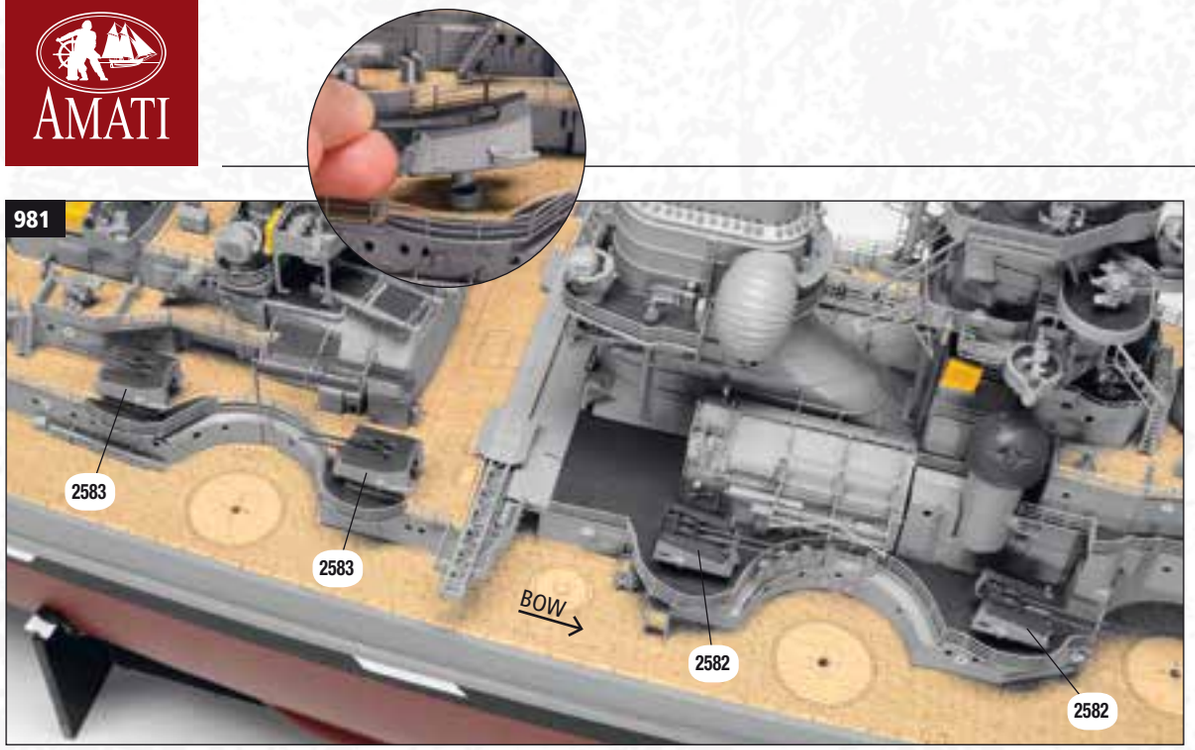

981 Insert the dowel protruding under the base of the heavy anti-aircraft guns into base 2553 as shown in the detail and fix two cannons 2583 to the lower deck of the stern superstructure on the starboard side and two cannons 2582 to the lower deck of the stern superstructure.

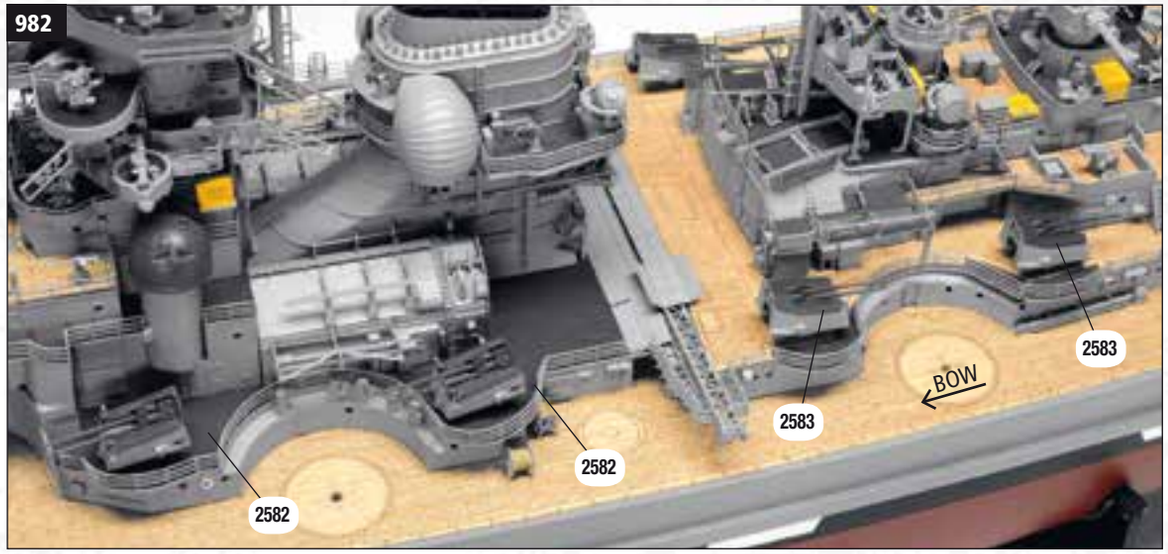

982 Move to the port side and attach the other four guns 2582, 2583 to the superstructure decks symmetrically.

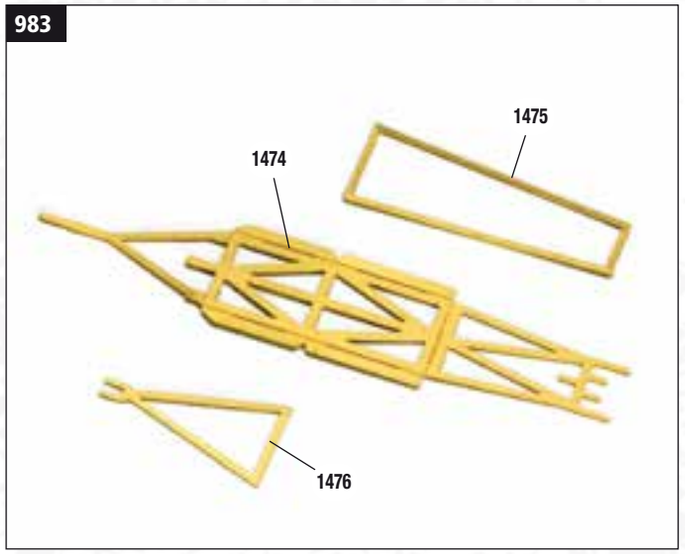

983 Remove the pieces shown in the picture from sheet 1564; you will need them for the assembly of the slide of the catapult of the first Arado.

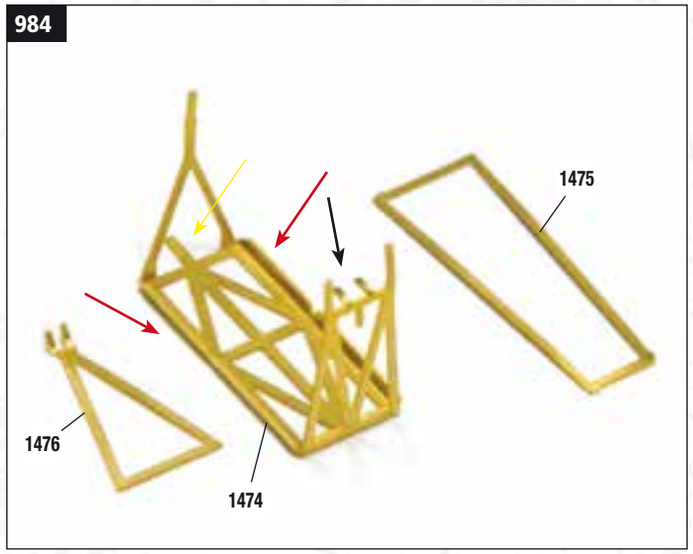

984 Bend up the edges on the long side of piece 1474 (red arrows). Lift the two parts, the back and the front; however, do not bend the dowel indicated by the yellow arrow. Bend inwards at right angle the two dowels at the top indicated by the black arrow. Also curve the two upper dowels of triangle 1476 upwards.

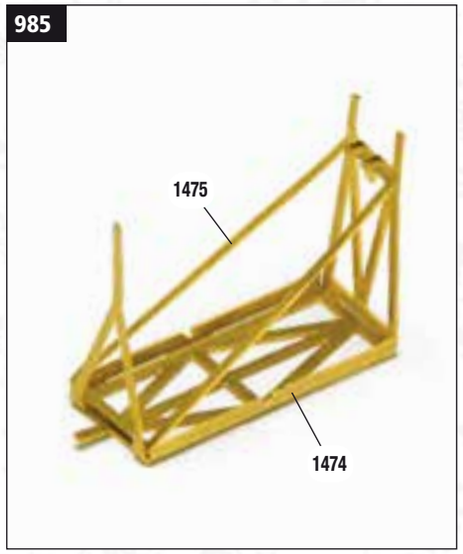

985 Glue trapeze 1475 diagonally onto structure 1474; place the right end of this piece under the two dowels just bent.

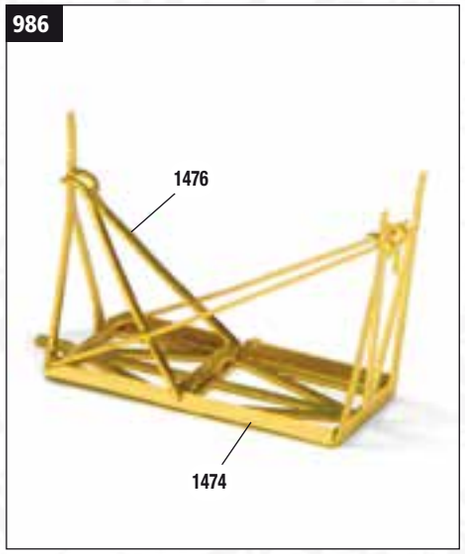

986 Take triangle 1476 and glue it diagonally onto structure 1474 as shown in the picture. Attach the two outer dowels of piece 1476 to the vertical pin of the frame.

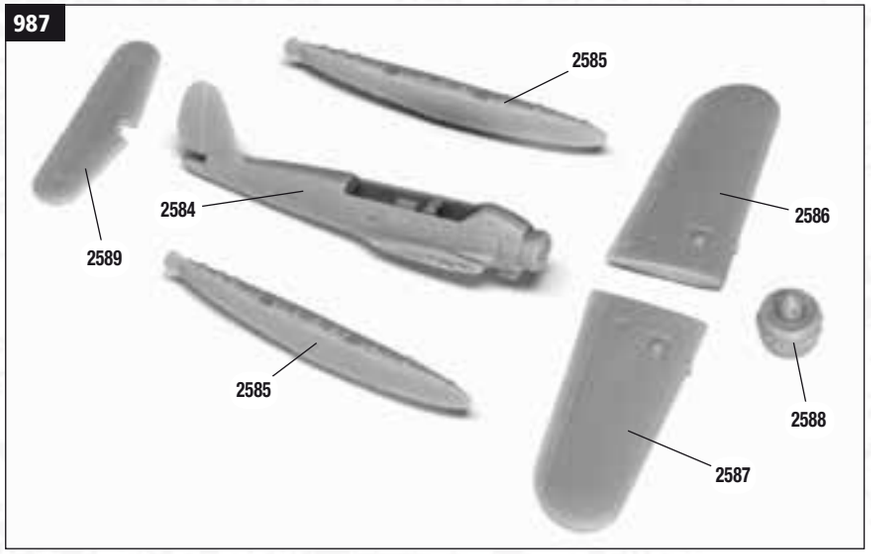

987 Remove from sprues P19, P20 the plastic components for assembling the Arado: fuselage 2584; two floats 2585, wings 2586, 2587, motor 2588, rudder 2589.

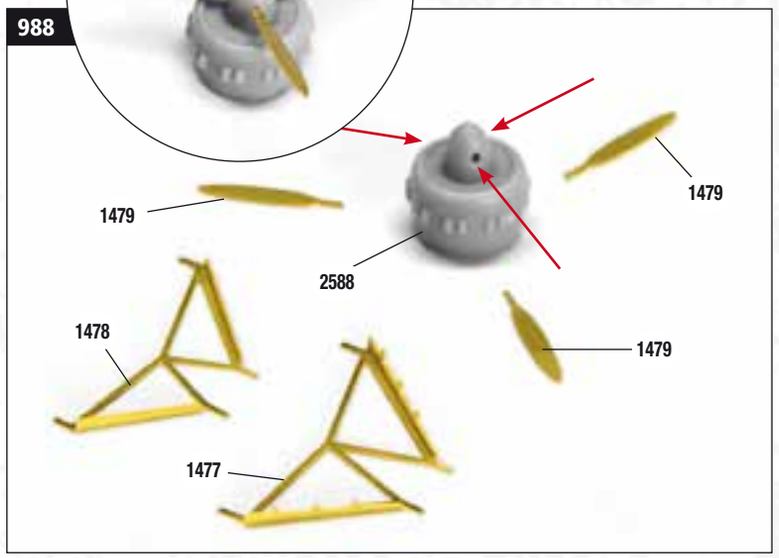

988 Take the support diagonals of floats 1478, 1477 which you can find on sheet 1564 and bend the side flaps of the two supports upwards. With a fine drill bit, go over the three holes on motor 2588 for assembling propeller blades 1479 which you can find on sheet 1564. Insert them diagonally into the holes as shown in the detail above; then glue.

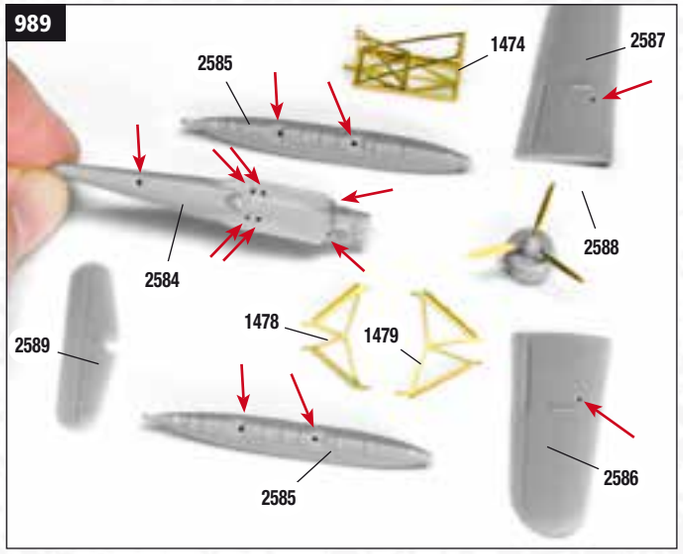

989 With a fine drill bit, go over the holes indicated by the red arrows: under fuselage 2584, on floats 2585 and on wings 2586, 2587.

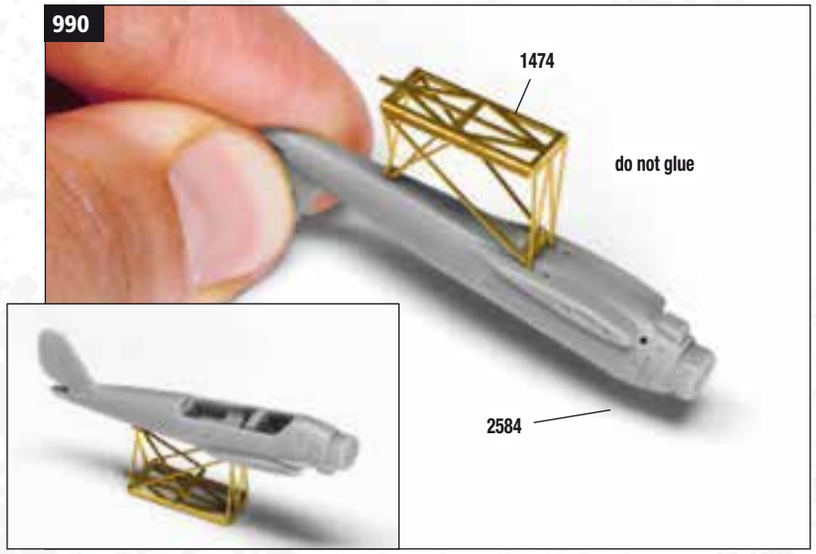

990 Temporarily insert the dowels of the sled structure of the catapult prepared in step 986 into the three lower holes of fuselage 2584, orient the pieces correctly and do not glue.

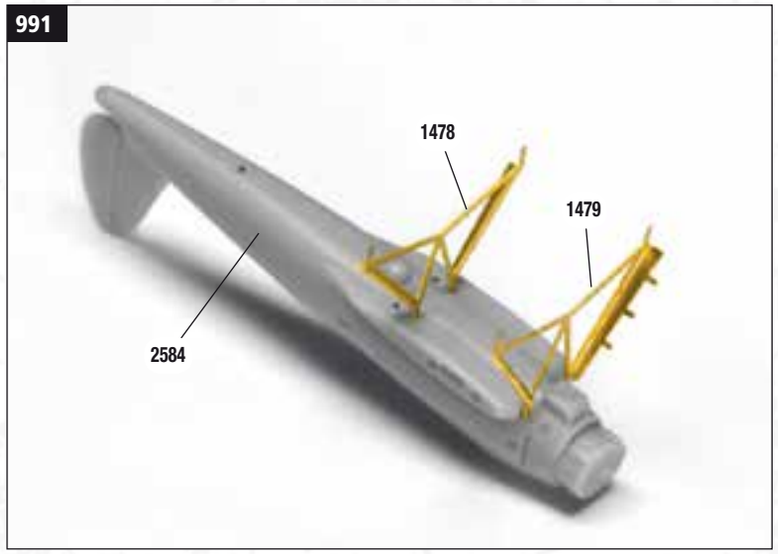

991 Remove the sled and insert two supports 1478, 1479 into the four front dowels under the fuselage. Orient the wings of piece 1479 towards the nose, those of piece 1478 towards the tail; then glue them in place.

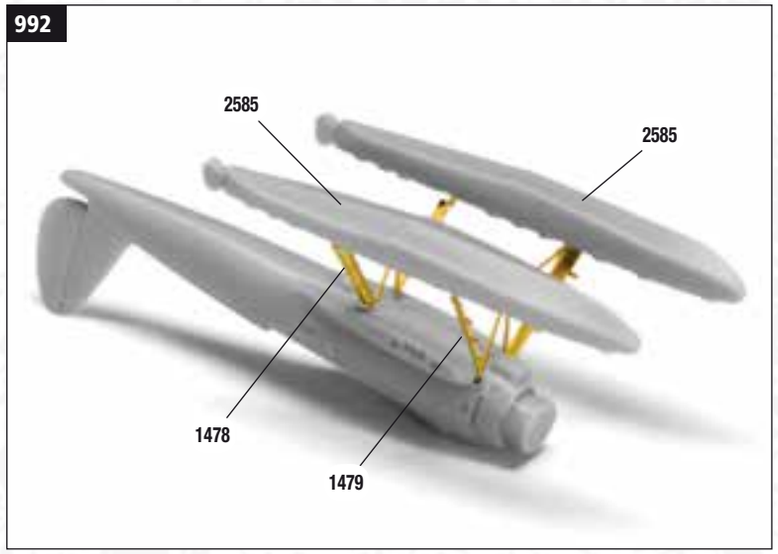

992 Insert in the holes of floats 2585 the dowels of the support diagonals 1478, 1479; check that they are parallel to each other; then glue.

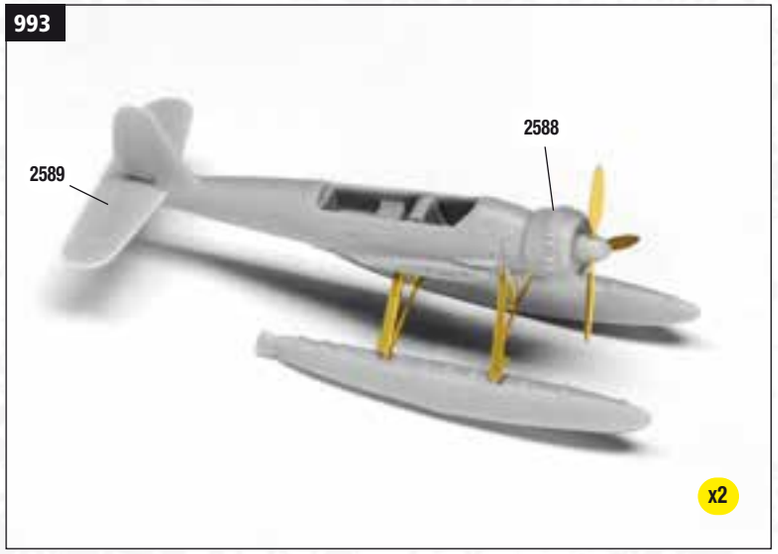

993 Return the seaplane to the correct position and glue motor 2588 to the nose of the fuselage and rudder 2589 to the tail. At this point, you can prepare the second Arado by repeating the assembly steps from 983 to 993.

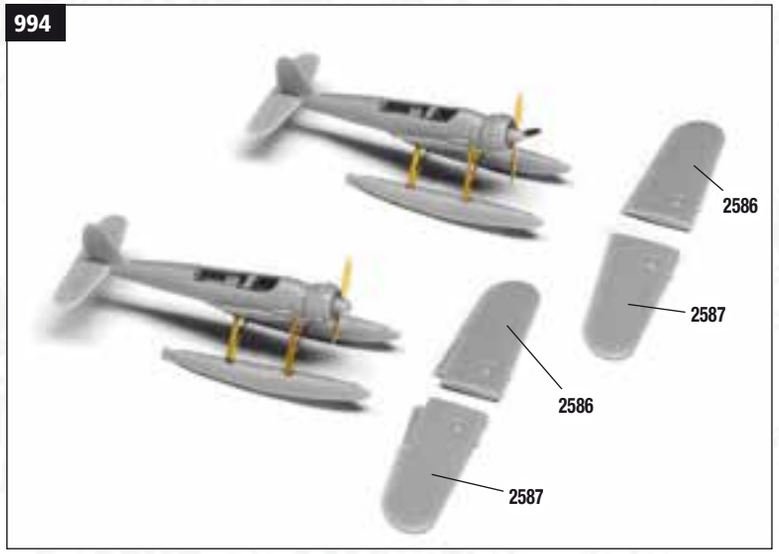

994 Both seaplanes can be assembled with the wings outstretched or bended. In the next steps, both solutions will be shown in the picture, one with open wings and one with closed wings; you can choose how to assemble them.

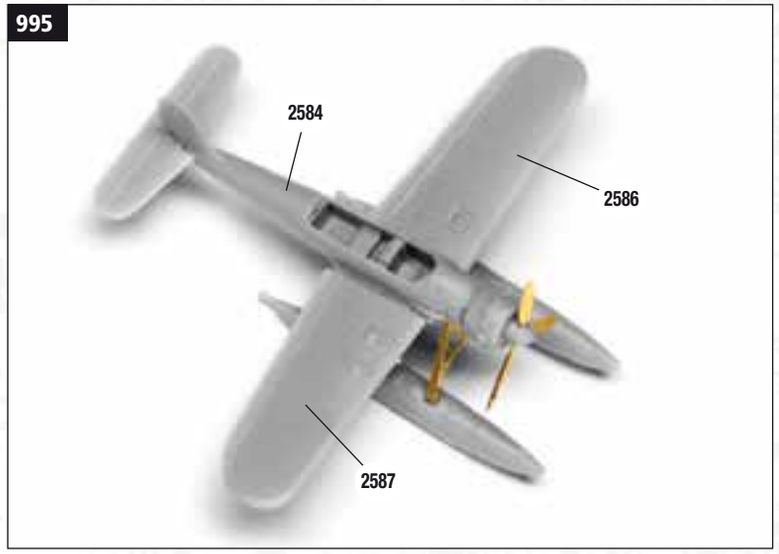

995 Glue to the fuselage of the first Arado wings 2586, 2587 spread.

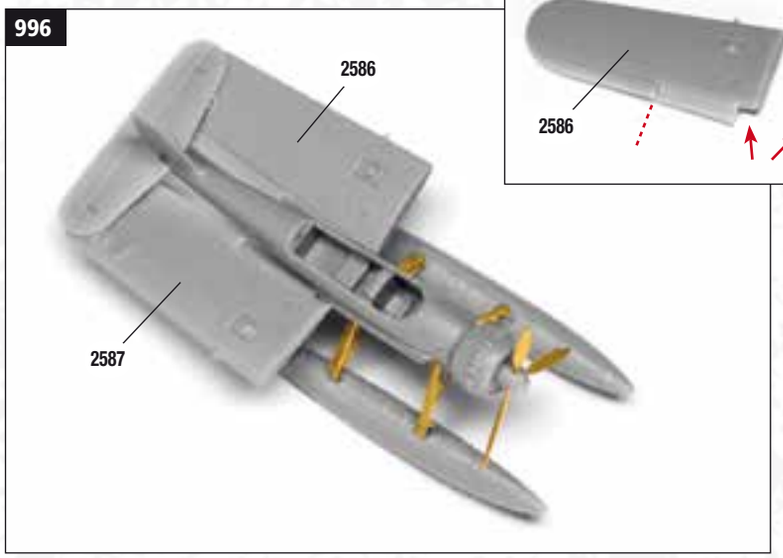

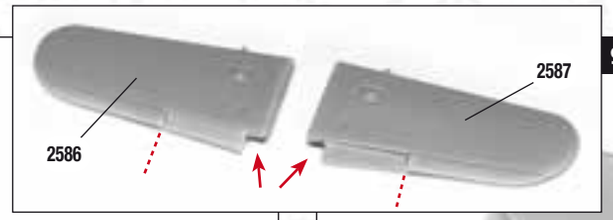

996 Take the wings of the second Arado and cut the attachment points between the flap and the wings with a cutter. Remove the inner edges of the wings indicated by the red arrows. Bend the flap down as shown in the detail above. At this point, you can glue the wings in the bended position to the sides of the fuselage.

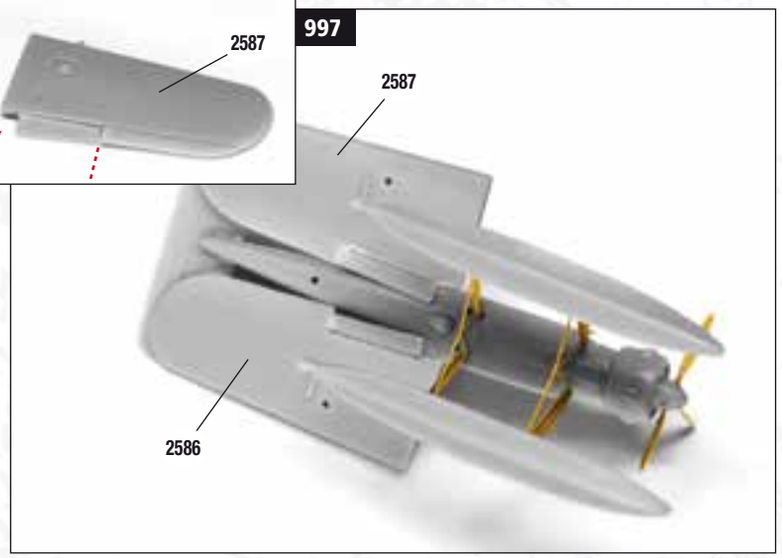

997 In this picture you can see the second seaplane seen from below with its wings bended.

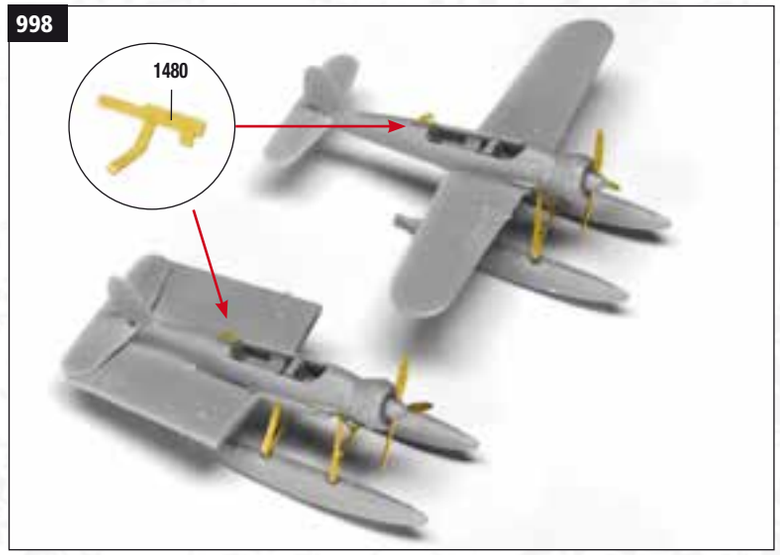

998 Remove the two machine guns 1480 from sheet 1564 and glue them to each aircraft behind the cockpit as shown in the picture. The two Arados are ready to be painted.

999

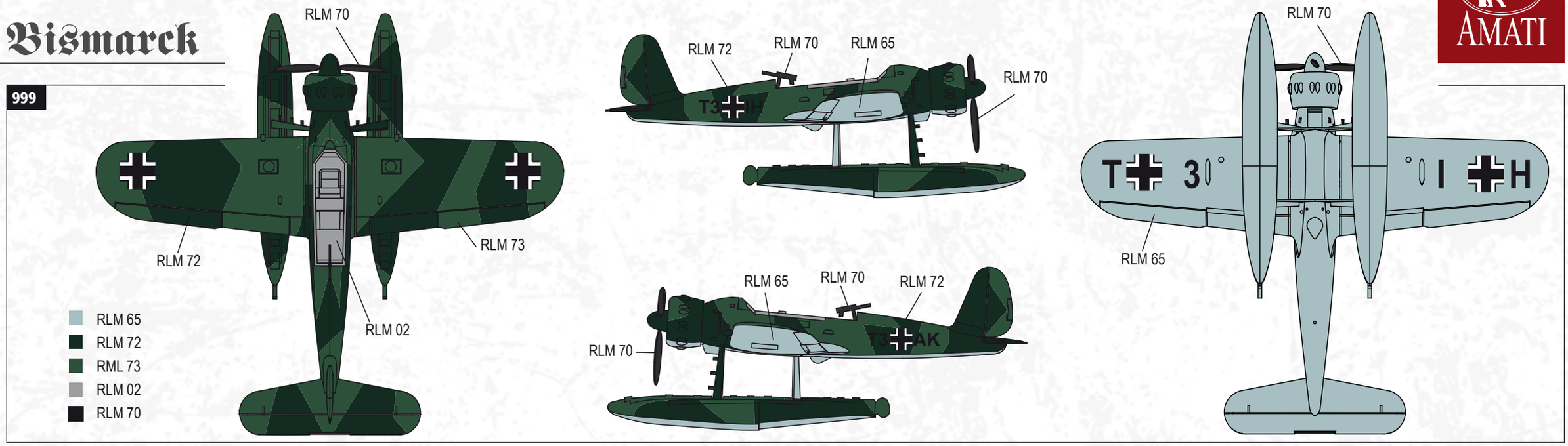

999 Now you can proceed with colouring the two seaplanes. Carefully observe the drawing presented in the picture above to identify the areas of colouring. For the lower part of the plane, you will need to use a RLM 65 blue grey paint; while for the upper part, you will need a RLM 73 green paint. With Ral 7001 grey, paint the cockpit of the plane and the three propellers and the machine gun with matt black paint. Once dry, apply a brush with the green colour RLM 73 only on the upper part of the front supports of the floats and with RLM 72 dark green for the camouflage colouring steps following the colour areas shown in the picture in the drawing. Repeat the colouring steps for the second Arado as well. When the colour is perfectly dry, you can proceed with setting up the seaplanes with the application of the transfers which you can choose from the four proposals included on the sheet. Observe the pictures above to identify the correct positioning and the photos which you can find in the next steps. In the same way, apply the transfers to the Arado with the bended wings. When these are also completely dry, apply an opaque transparent protective spray paint on the entire surface of the seaplanes in order to uniform the colour and the transfers.

1000

1000 Take the green adhesive threads to cover the frame of the transparent plastic canopy 2590 (sprue P18) of the Arado. To detach the threads, cut the two heads with the tip of a cutter. Separate from the relative adhesive sheet.

1001

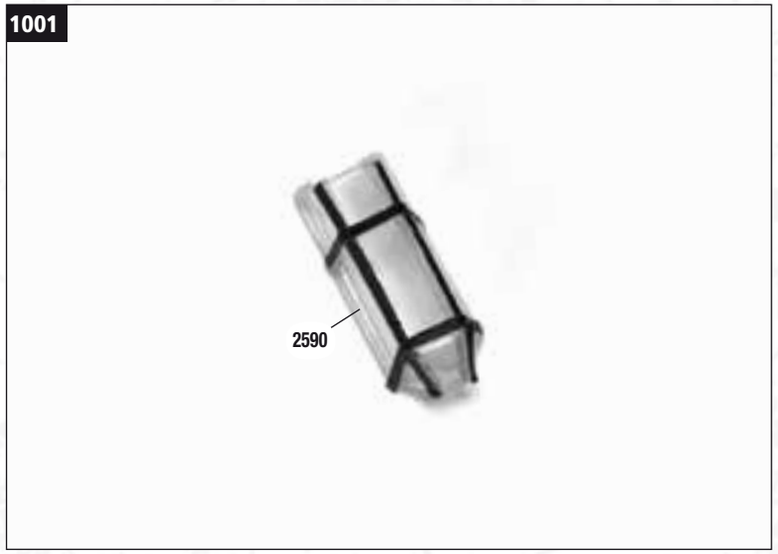

1001 Apply the threads to the edges of the canopy as shown; trim the excesses. With your fingers, make the strips adhere well to the canopy.

1002

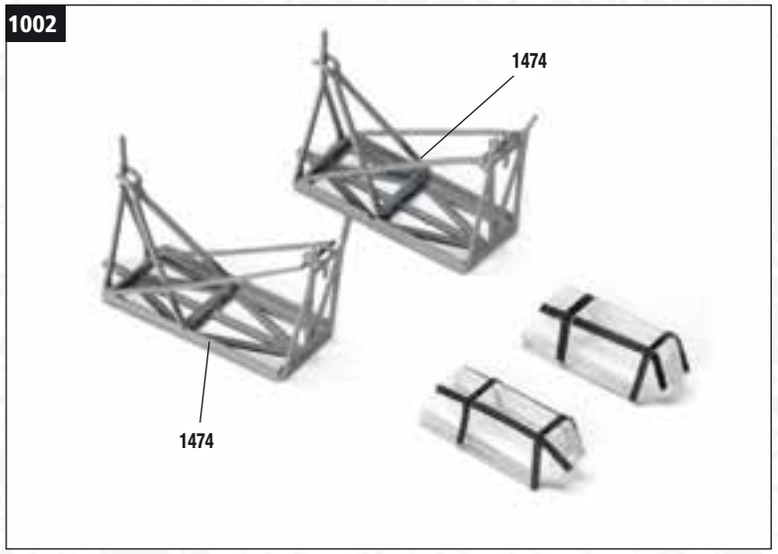

1002 Prepare the second canopy and paint the structures of the slides of the catapults prepared in the previous stages entirely with Ral 7001 grey.

1003

1003 Glue the two canopies to the cockpits of the seaplanes.

1004

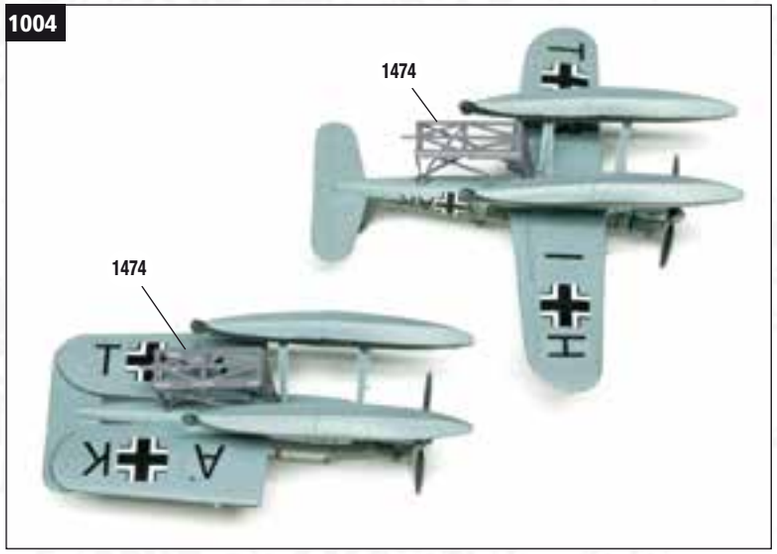

1004 Turn the Arado over and insert the two slides 1474 in the three lower holes of each fuselage; then glue.

1005

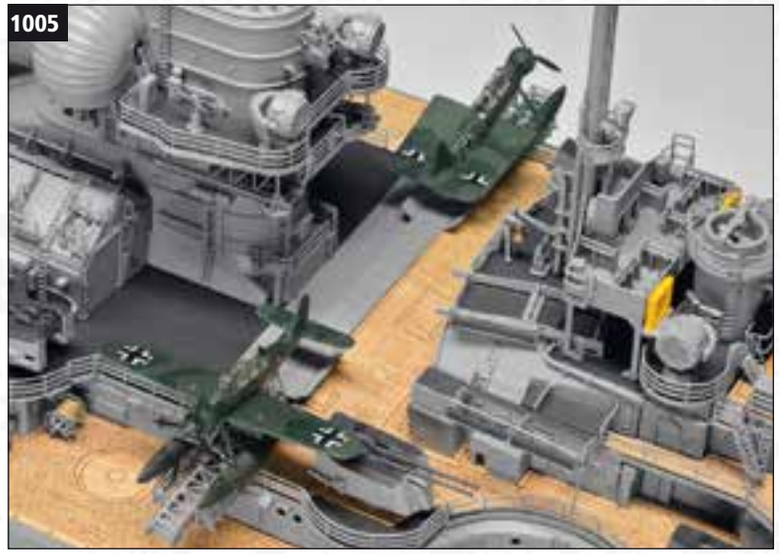

1005 Position the two Arado on the launch catapult ramps, placing the slides in the centre of the ramps. Glue the slides to the catapults and orient the Arado towards the outside of the model.

1006

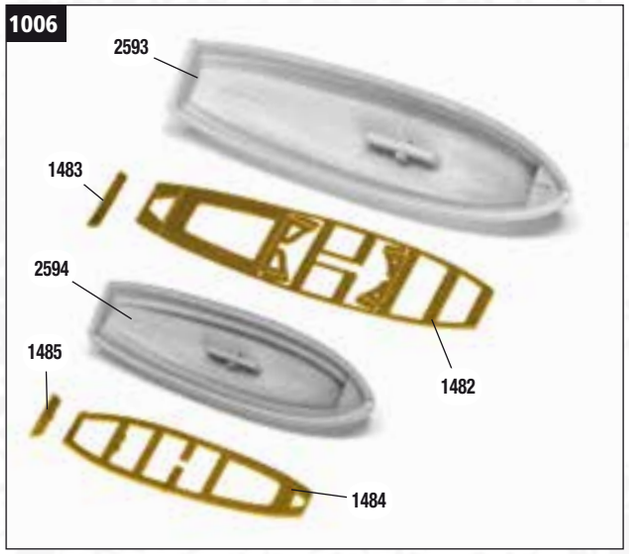

1006 Now move on to the preparation of lifeboats; there are four different types of them. Remove accessories from 1482 to 1485 from sheet 1564 to set up the first double lifeboat 2593-2594 which you can find on plastic frames P6, P7.

1007

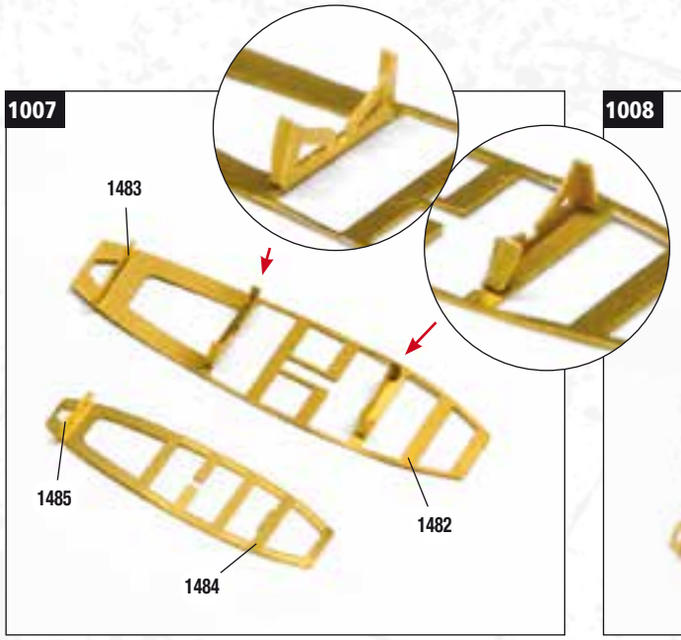

1007 Bend upwards, along the engraved lines, the two supports of the 1482 structure. Glue the rear backrests 1483, 1485 of the benches to 90° on the respective structures 1482 and 1484. The short side of these two backrests must be inserted in the appropriate joints.

1008

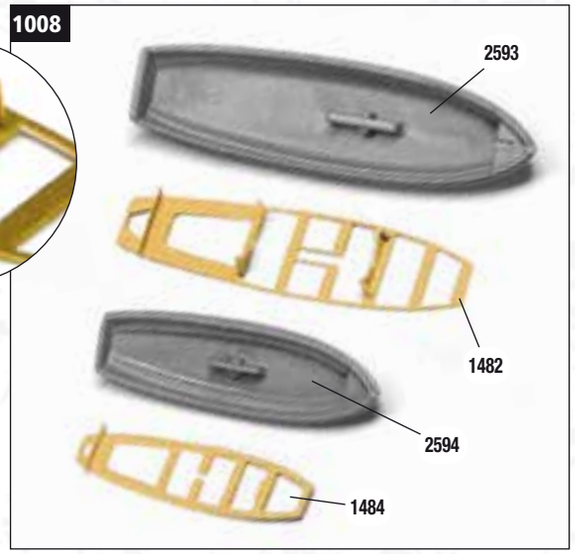

1008 Paint the two lifeboats 2593, 2594 entirely in Ral 7001 grey and structures 1482, 1484 of the benches with a Ral 1001 wood colour.

1009

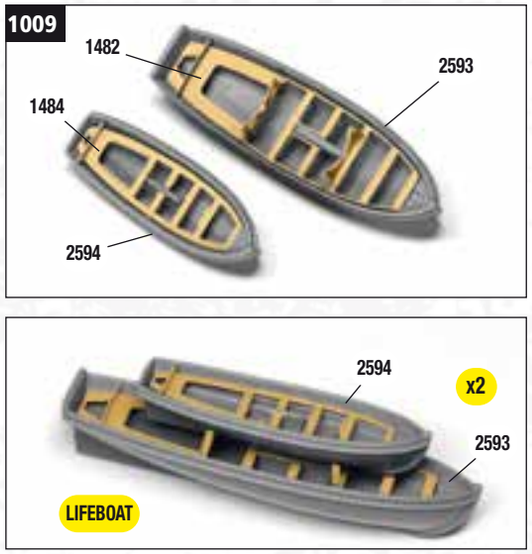

1009 Once dry, you can insert and fix the two structures to the lifeboats. Place the small lifeboat on the supports of the large lifeboat; then glue. Repeat these work steps from step 1006 to step 1009 and prepare a total of two double lifeboats 2593-2594.

1010

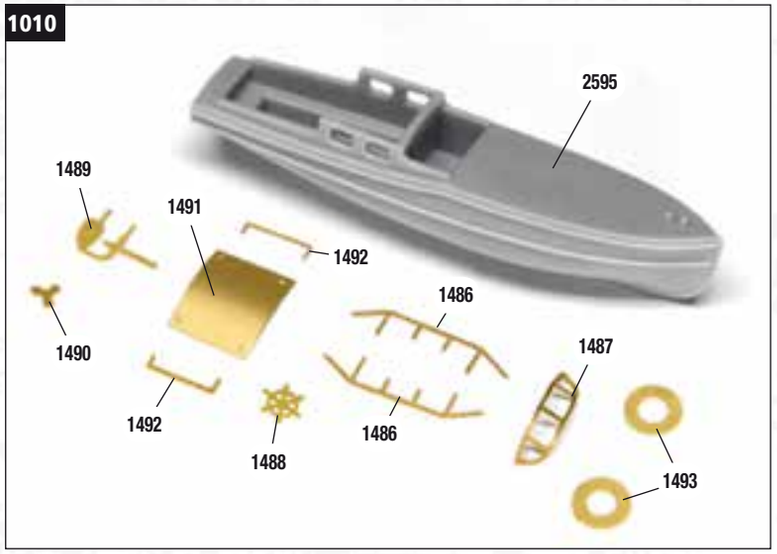

1010 With the pieces shown in the picture (sheet 1564) set up the second type of boat: motor launch 2595, frame (P8). Referring to the following pictures, slightly curve windshield 1487 and canopy 1491 in view of their positioning.

1011

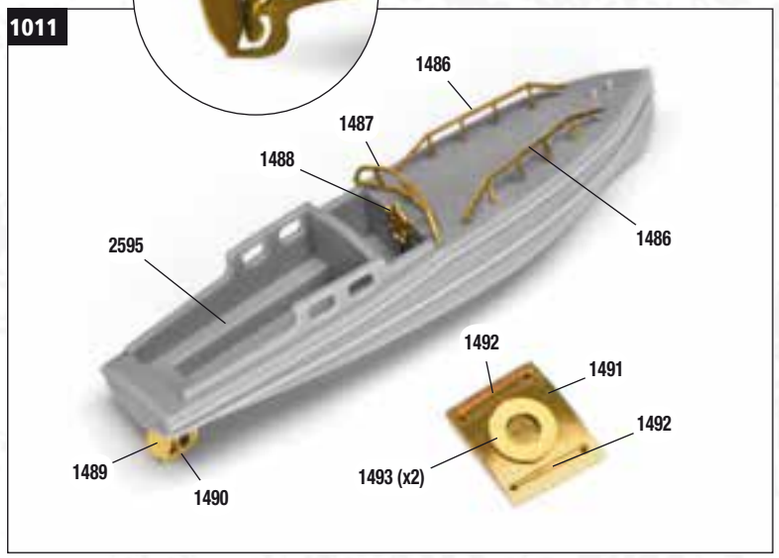

1011 Glue the two handrails 1486, windshield 1487, ship's wheel 1488 on launch 2595, as shown in the picture. With a fine drill bit, go over the two holes under the hull for propeller shaft 1489. Insert and glue propeller 1490 to shaft 1489; if necessary, enlarge the hole in the centre of the propeller. Glue the shaft and propeller to the hull as shown in the detail above. Couple the two ring buoys 1493 together and set up canopy 1491 with the two 1492 handrails and ring buoys 1493 (x2).

1012

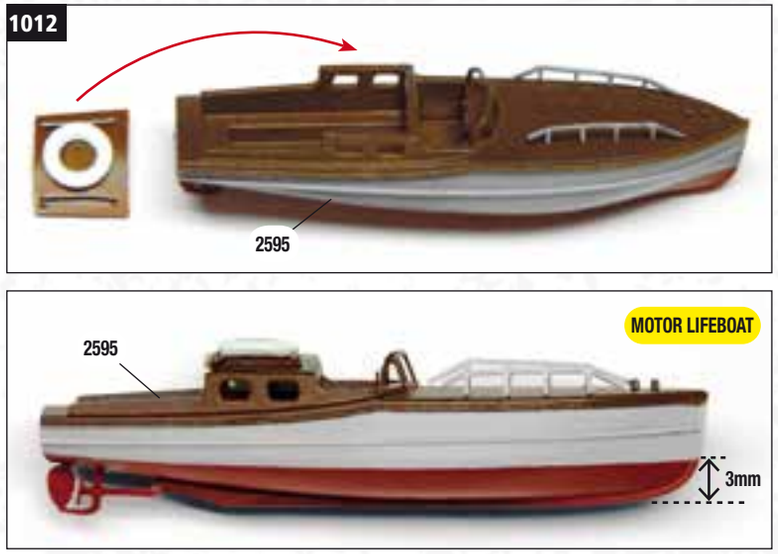

1012 Paint with a brush motor launch 2595, following the colours and measurements shown in the pictures above. Colour the hull and the rails in Ral 7001 grey; the hull below the waterline in Ral 8013; the upper part of the lifeboat in Ral 8016 mahogany brown and ring buoy 1493 (x2) in matt white. Once dry, you can glue canopy 1491 onto the superstructure.

1013

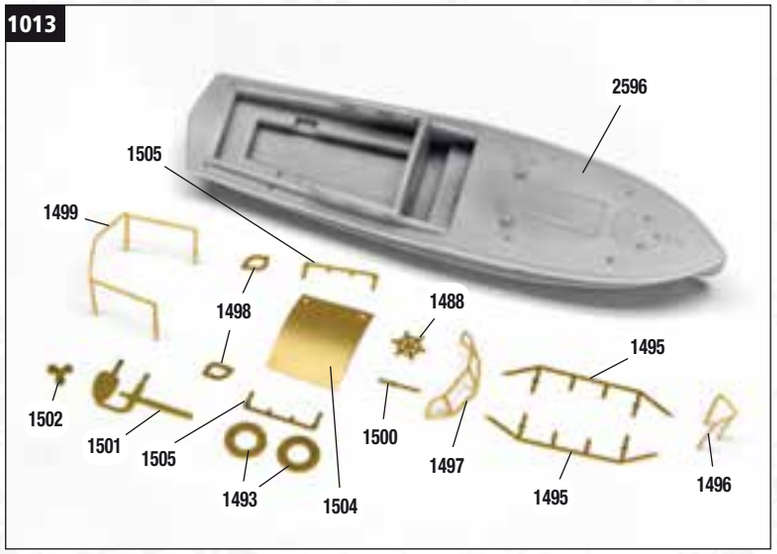

1013 Now prepare the third type of boat: officer's launch. Prepare the accessories presented in the picture above which you can find on sheet 1564 and plastic launch 2596, frame P10. Referring to the following pictures, slightly curve windshield 1497, railings 1496, 1499 and canopy 1504.

1014

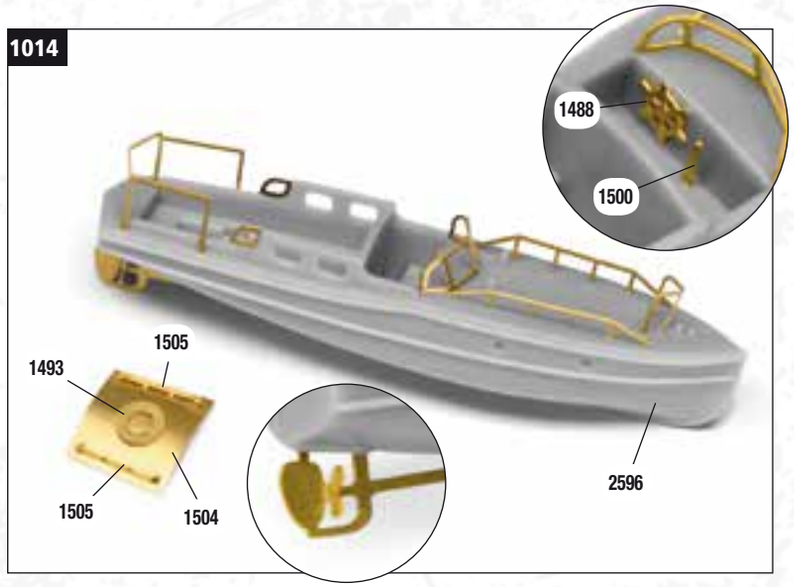

1014 Before gluing the various accessories on the launch, widen the holes intended for fitting the handrails, railings and propeller shaft. Then glue the accessories in place on the lifeboat. Set up canopy 1504 with ring buoys 1493 (x2) and the two handrails 1505. Also attach rudder 1488 and lever 1500, as shown in the detail.

1015

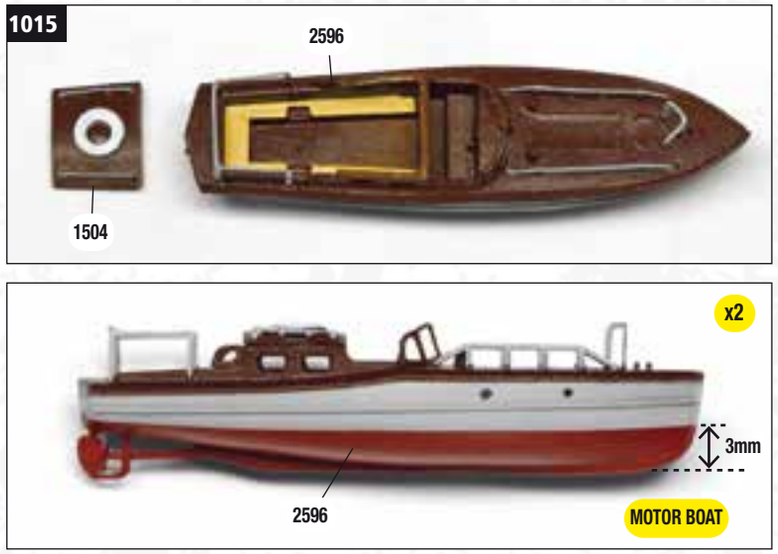

1015 Paint with a brush launch 2596, following the colours and measurements shown in the pictures above. Colour the hull, railings and handrails in Ral 7001 grey; the hull below the waterline in Ral 8013 red; the upper part of the motor boat in Ral 8016 mahogany brown; the benches in Ral 1001 light wood and the ring buoy 1493 (x2) in matt white. Once dry, you can glue canopy 1504 on the superstructure. Repeat the assembly of the lifeboat and prepare a total of two motor boats.

1167

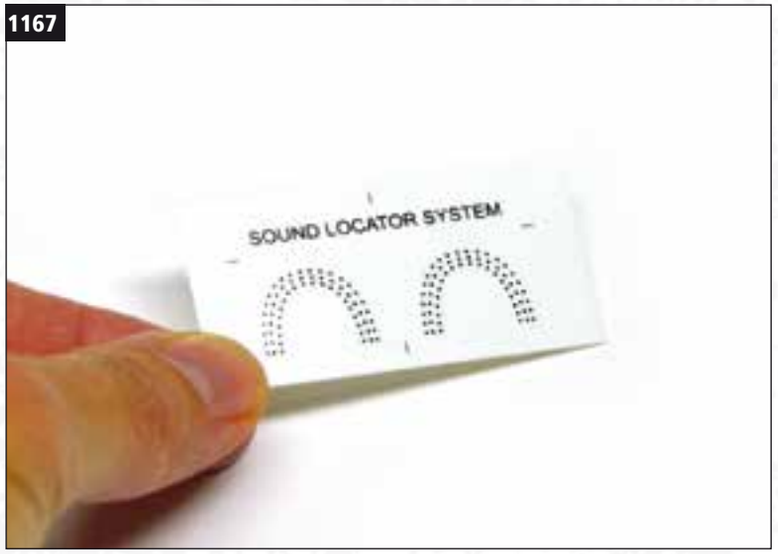

1167 Take the sheet with the transfers of the Sound Locator System that you will have to apply to the sides of the hull of the model. Cut out one of the two decals provided with the SLS, leaving a little margin around the drawing. Immerse the first transfer in a tray of water.

1168

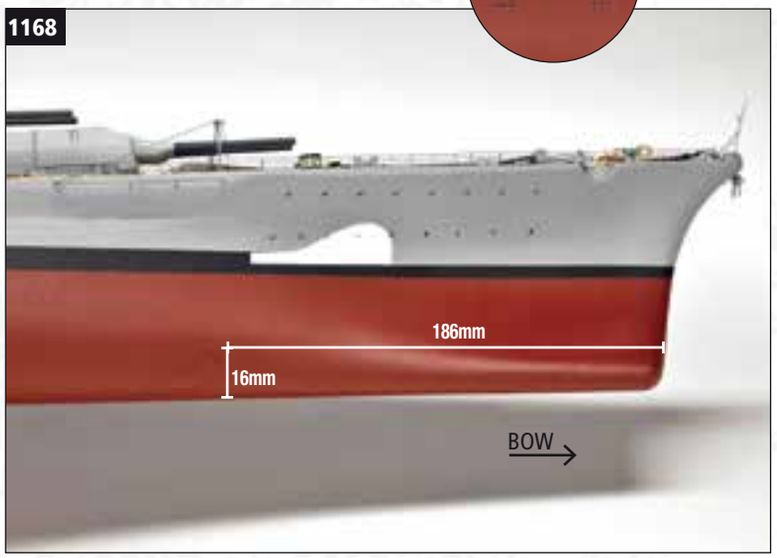

1168 Mark the measurement of 186mm on the starboard side of the hull, starting from the bow of the ship, and the measurement of 16mm starting from the lower profile of the hull. Take the wet transfer and slide the drawing across the hull surface aligned with the traced marks. Spread it with a brush and let it adhere well to the surface. Repeat the same operation for the port side.

1169

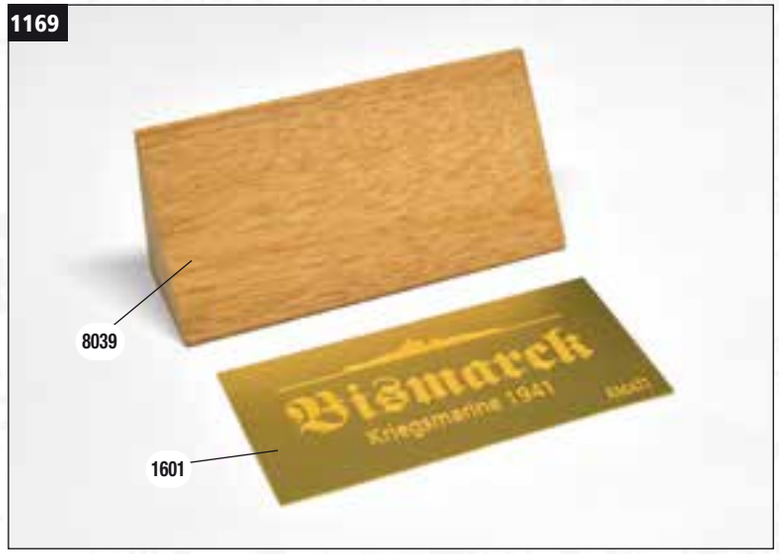

1169 Take wooden support 8039 and brass plate 1601 which you can find on sheet 1563.

1170

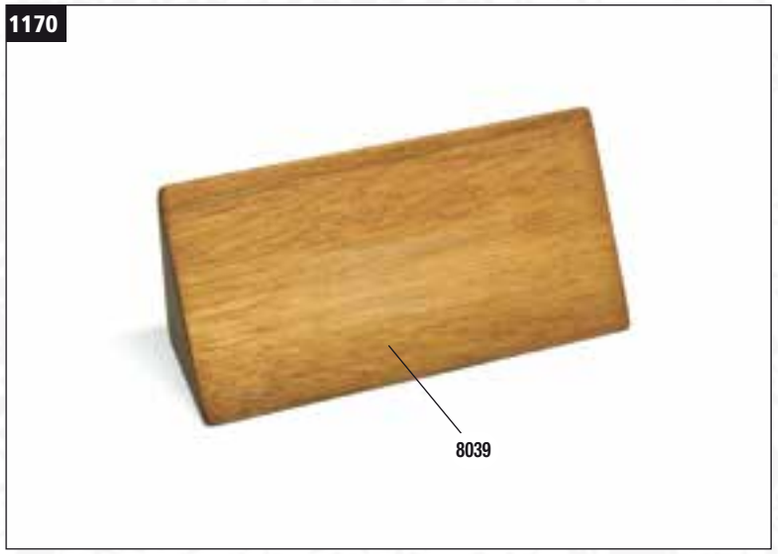

1170 With medium-grit sandpaper, sand the entire surface of the wooden support. Apply a nut-brown stain of sufficient quantity, until you reach the shade you desire. Once dry, sand again with fine-grit sandpaper. Finally, to enhance the wood, spread the beeswax on the support.

1171

1171 Take sheet 1601 and paint the profile of the ship in matt black and the central writings engraved on the plate masking the "Amati" logo at the bottom right. Once dry, remove the adhesive tape and vice versa paint the logo in Ral 3003 red, masking the rest of the plate. Let it dry very well and remove the tape from the plate.

1172

1172 Using fine-grit sandpaper, remove the black and red paint from the parts in relief on the plate. The engraved graphics will keep the two colours. Finally, glue the plate to the centre of the inclined wall of the wooden support with superglue.

1173 Congratulations: you have reached the end of the construction of the Bismarck! We recommend that you exhibit this impressive model in a glass or Plexiglas case, to preserve your work over time.

Warning: all the pieces which were not used during the work and which are therefore left over have been included for production needs; keep them in a proper place.

PLASTIC PARTS

CODE	Q.TY	DESCRIPTION
P1	1 Sprue	Stern sprue
P2	1 pc.	Stanchion template
P3	1 Sprue	Bow sprue
P4	1 Sprue	Bow sprue
P5	1 Sprue	Upper deck stanchion
P6	2 pcs.	Lifeboats - big
P7	2 pcs.	Lifeboats - small
P8	1 pc.	Lifeboats - Motor launch
P9	4 pcs.	Lifeboats - Connection motor boats
P10	2 pcs.	Lifeboats - Officer's launch
P11	1 Sprue	Chocks - Paravane - anti-aircraft carriage
P12	1 Sprue	Gun breech and wire roll
P13	1 Sprue	Searchlights stands
P14	4 pcs.	Anti-aircraft guns 10.5 cm / L65-SK-C/33 (Body)
P15	4 pcs.	Anti-aircraft guns 10.5 cm / L65-SK-C/33 (Base)
P16	4 pcs.	Anti-aircraft guns 10.5 cm / L65-SK-C/37 (Body)
P17	4 pcs.	Anti-aircraft guns 10.5 cm / L65-SK-C/37 (Base)
P18	1 Sprue	Searchlights and Arado canopy
P19	2 Sprues	Arado
P20	1 Sprue	Arado (motors) and searchlights
P21	2 Sprues	Ladders
P22	1 Sprue	Capstans, stern flag pole, fairlead
P23	1 Sprue	Dome radar - Training gun - Quad flak
P24	1 Sprue	Miscellaneous
P25	1 Sprue	Miscellaneous
P26	1 Sprue	Miscellaneous
P27	1 Sprue	Parawaves - Rangefinders - Gun barrels (spare)
P28	2 pcs.	Crane (motors)
P29	2 pcs.	Crane (base)
P30	1 Sprue	Crane - Anchors shroud
P31	1 Sprue	Anchors and propellers
P32	1 Sprue	Small anchor
P33	1 Sprue	Propellers (detail)
P34	2 pcs.	Rudders (static model only)
P35	1 Sprue	Rangefinders station (central and bow)
P36	1 Sprue	Steering compass - Searchlights - Rangefinders
P37	1 Sprue	Anti - Aircraft guns and finders
P38	1 Sprue	Funnel
P39	1 Sprue	Funnel (top and side)
P40	1 Sprue	Turret
P41	1 Sprue	Admiral's bridge - Searchlight deck
P42	1 pc.	Foretop
P43	1 Sprue	Rangefinder main station - Arado crane platform
P44	1 Sprue	Bollards and various
P45	1 pc.	Lower main deck
P46	1 Sprue	Rangefinders turret (stern)
P47	1 pc.	Main deck (parts of)
P48	1 pc.	Watchtower
P49	1 Sprue	Stern small turret
P50	1 Sprue	Rangefinders small turret
P51	1 Sprue	Miscellaneous
P52	1 Sprue	Funnel platform
P53	1 Sprue	Hangar stern superstructure
P54	1 Sprue	Trunks

BOW AND STERN STRUCTURES - PROPELLERS SUPPORT

CODE	Q.TY	DESCRIPTION
2301	1	Propellers support
2302	1	Stern structure
2303	1	Bow structure
2304	1	Bow structure

PHOTO-ETCHED PARTS

CODE	SIZE	Q.TY	MATERIAL	DESCRIPTION
1554	244.25 x 129.33 mm	1	Brass etch 0.4 mm	Bow superstructure - (step 1)
1555	244.25 x 129.33 mm	1	Brass etch 0.4 mm	Bow superstructure - (step 2)
1556	244.25 x 129.33 mm	1	Brass etch 0.4 mm	Bow superstructure - (step 3/4) and hull fittings
1557	244.25 x 129.33 mm	1	Brass etch 0.4 mm	Bow superstructure - (upper level and funnel)
1557B	244.25 x 76.90 mm	1	Brass etch 0.4 mm	Bow hangar - Foremast
1558	244.25 x 129.33 mm	1	Brass etch 0.4 mm	Stern superstructure - (step 1/2)
1559	244.25 x 129.33 mm	1	Brass etch 0.4 mm	Stern superstructure - (step 2/3)
1560	244.25 x 129.33 mm	1	Brass etch 0.4 mm	Foremast and various fittings
1561	244.25 x 129.33 mm	1	Brass etch 0.4 mm	Fittings (various) - Medium guns
1562	244.25 x 129.33 mm	1	Brass etch 0.4 mm	Heavy guns cover
1563	194.25 x 97.4 mm	1	Brass etch 0.4 mm	Plate and various
1564	244.25 x 57.40 mm	1	Brass etch 0.2 mm	Life boats and stanchions - Arado spare parts
1565	194.25 x 121.88 mm	1	Brass etch 0.4 mm	Bulwarks and gratings
1566	178 x 56 mm	1	Brass etch 0.4 mm	Guns - Round base cover and various