MODEL 67054-1

STAMPEDE® 4x4

TRAXXAS

OWNER'S MANUAL

3 BEFORE YOU PROCEED
4 SAFETY PRECAUTIONS
7 TOOLS, SUPPLIES, AND REQUIRED EQUIPMENT
8 ANATOMY OF THE STAMPEDE 4X4
9 QUICK START: GETTING UP TO SPEED
10 THE TRAXXAS TQ 2.4GHz RADIO SYSTEM
18 ADJUSTING THE ELECTRONIC SPEED CONTROL
21 DRIVING YOUR MODEL
24 ADJUSTING YOUR MODEL
28 MAINTAINING YOUR MODEL

Thank you for purchasing the Stampede 1/10-scale 4X4 electric monster truck. We are confident that you will appreciate the latest performance and appearance enhancements that have been engineered into this model. Following the legacy of the Stampede name, this 4X4 is overbuilt and Traxxas Tough to withstand all the 4-wheel drive monster mayhem you can dish out. Whether you're going through muddy water crossings or just having fun crushing your buddies' cars, the Stampede 4X4 just doesn't know when to quit. It's tall, drive-over-anything ground clearance, ultra-tough, long-arm suspension, and Maxx Chevron off-road tires make Stampede 4X4 feel nearly indestructible. It's even waterproof for fun in all kinds of wet conditions! No other truck offers Stampede 4X4's unique style, capability, and reputation for durability. The Stampede 4X4 will reward you with off-road excitement and high-speed performance in a durable, long-lasting product.

We know you're excited about getting your new model on the road, but it's very important that you take some time to read through this Owner's Manual. It contains the instructions you will need to operate and maintain your model so that you can enjoy it for years to come. This manual also contains all the necessary set-up and operating procedures that will allow you to unlock the performance and potential that Traxxas engineers designed into your model. **Even if you are an experienced RC enthusiast, it's important to read and follow the procedures in this manual.**

Thank you again for choosing Traxxas. We work hard every day to ensure you receive the highest level of customer satisfaction possible. We truly want you to enjoy your new model!

Traxxas Support
Traxxas support is with you every step of the way. Refer to the next page to find out how to contact us and what your support options are.

Quick Start
This manual is designed with a Quick Start path that outlines the necessary procedures to get your model up and running in the shortest time possible. If you are an experienced R/C enthusiast, you will find it helpful and fast. Be sure and read through the rest of the manual to learn about important safety, maintenance, and adjustment procedures. Turn to page 9 to begin.

REGISTERING YOUR MODEL

In order to serve you better as our customer, please register your product within 10 days of your purchase online at Traxxas.com/register.

Traxxas.com/register

FCC Compliance
This device contains a module that complies with the limits for a Class B digital device as described in part 15 of the FCC rules. Operation is subject to the following two conditions: (1) This device may not cause harmful interference, and (2) this device must accept any interference received, including interference that may cause undesired operation.

The limits for a Class B digital device are designed to provide reasonable protection against harmful interference in residential settings. This product generates, uses and can radiate radio frequency energy, and, if not operated in accordance with the instructions, may cause harmful interference to radio communications. The user is cautioned that changes or modifications not expressly approved by the party responsible for compliance could void the user's authority to operate the equipment.

Canada, Industry Canada (IC)
This Class B digital apparatus complies with Canadian ICES-003 and RSS-210. This device complies with Industry Canada license exempt RSS standard(s). Operation is subject to the following two conditions: This device may not cause interference, and this device must accept any interference, including interference that may cause undesired operation of the device.

Radio Frequency (RF) Exposure Statement
This equipment complies with radio frequency exposure limits set forth by FCC and Industry Canada for an uncontrolled environment. This equipment should be installed and operated with a minimum distance of 20 centimeters between the radiator and your body or bystanders and must not be co-located or operating in conjunction with any other antenna or transmitter.

TQ Radio System
Operation Frequency: 2406~2453 MHz
Maximum Radio Frequency Power: Maximum Peak Power -1 dBm

Traxxas High-Current Connector
Operation Frequency: 13.56 MHz
Maximum Radio Frequency Power: Maximum Peak Power -29.27 dBuA/m @ 10m

Carefully read and follow all instructions in this and any accompanying materials to prevent serious damage to your model. Failure to follow these instructions will be considered abuse and/or neglect.

Before running your model, look over this entire manual and examine the model carefully. If for some reason you decide it is not what you wanted, then do not continue any further. **Your hobby dealer absolutely cannot accept a model for return or exchange after it has been run.**

WARNINGS, HELPFUL HINTS, & CROSS-REFERENCES

Throughout this manual, you'll notice warnings and helpful hints identified by the icons below. Be sure to read them!

An important warning about personal safety or avoiding damage to your model and related components.

Special advice from Traxxas to make things easier and more fun.

Refers you to a page with a related topic.

SUPPORT

If you have any questions about your model or its operation, call the Traxxas Technical Support Line toll-free at:
1-888-TRAXXAS (1-888-872-9927)*

Technical support is available Monday through Friday from 8:30am to 9:00pm central time. Technical assistance is also available at Traxxas.com. You may also e-mail customer support with your question at support@Traxxas.com. Join thousands of registered members in our online community at Traxxas.com.

Traxxas offers a full-service, on-site repair facility to handle any of your Traxxas service needs. Maintenance and replacement parts may be purchased directly from Traxxas by phone or online at Traxxas.com. You can save time, along with shipping and handling costs, by purchasing replacement parts from your local dealer.

Do not hesitate to contact us with any of your product support needs. We want you to be thoroughly satisfied with your new model!

*Toll-free support is available to U.S. residents only.

Traxxas
6250 Traxxas Way
McKinney, Texas 75070
Phone: 972-549-3000
Toll-free 1-888-TRAXXAS

Internet
Traxxas.com
E-mail: support@Traxxas.com

Entire contents ©2019 Traxxas. Traxxas, Ready-To-Race, Ready-To-Win, and ProGraphix are trademarks or registered trademarks of Traxxas. Other brand names and marks are the property of their respective holders and are used only for purposes of identification. No part of this manual may be reproduced or distributed in print or electronic media without the express written permission of Traxxas. Specifications are subject to change without notice.

All instructions and precautions outlined in this manual should be strictly followed to ensure safe operation of your model.

This model is not intended for use by children under 14 years of age without the supervision of a responsible and knowledgeable adult.

1 Skill Level

No previous experience with radio controlled models is required. Models require a minimum of setup, maintenance, or support equipment.

All of us at Traxxas want you to safely enjoy your new model. Operate your model sensibly and with care, and it will be exciting, safe, and fun for you and those around you. Failure to operate your model in a safe and responsible manner may result in property damage and serious injury. The precautions outlined in this manual should be strictly followed to help ensure safe operation. You alone must see that the instructions are followed and the precautions are adhered to.

Important Points to Remember

- Your model is not intended for use on public roads or congested areas where its operation can conflict with or disrupt pedestrian or vehicular traffic.
- Never, under any circumstances, operate the model in crowds of people. Your model is very fast and could cause injury if allowed to collide with anyone.
- Because your model is controlled by radio, it is subject to radio interference from many sources that are beyond your control. Since radio interference can cause momentary losses of radio control, always allow a safety margin in all directions around the model in order to prevent collisions.
- The motor, battery, and speed control can become hot during use. Be careful to avoid getting burned.
- Don't operate your model at night, or anytime your line of sight to the model may be obstructed or impaired in any way.
- **Most importantly, use good common sense at all times.**

Speed Control

Your XL-5 is an extremely powerful electronic device capable of delivering high current. Please closely follow these precautions to prevent damage to the speed control or other components.

- **15-Turn Motor Limit:** The XL-5 has a 15-turn modified motor limit for 540 size motors and a 12-turn modified motor limit for 550 size motors with 0 timing when the motor is properly geared. If the motor or speed control is overheating, try a smaller pinion gear. Do not attempt to use a more powerful motor (fewer turns) than the above-mentioned motor limits or you could experience frequent thermal shutdown.
- **Insulate the Wires:** Always insulate exposed wiring with heat shrink tubing to prevent short circuits.
- **Transmitter on First:** Switch on your transmitter first before switching on the speed control to prevent runaways and erratic performance.
- **Use Neutrally Timed Motors:** For reverse use, the motors must have 0° timing. Modified motors (with adjustable end bells) timed to 0° or Johnson/ Mabuchi (closed end bell) motors are recommended. Using motors with other than 0° timing will draw excess current in reverse, and can result in the speed control overheating and premature motor wear.
- **4-7 NiMH cells or 2 LiPo cells (2s) Only:** The XL-5 can only accept a maximum input voltage of 8.4 volts (NiMH), 7.4 volts (2s LiPo). Always adhere to the minimum and maximum limitations of the XL-5 as stated in the specifications table.
- **Use the Factory Installed Connectors:** If you decide to change the battery or motor connectors, only change one battery or motor connector at a time. This will prevent accidentally mis-wiring the speed control. If the XL-5 is not wired exactly as shown in the diagram, it can be damaged! Please note that modified speed controls can be subject to a rewiring fee when returned for service.
- **No Reverse Voltage:** The speed control is not protected against reverse polarity voltage. When changing the battery and/or motor, be sure to install the same type of connectors to avoid reverse polarity damage to the speed control. Removing the battery connectors on the speed control or using the same-gender connectors on the speed control will void the product's warranty.
- **Motor Capacitors Required:** Three 0.1µF (50V) ceramic capacitors should be properly installed on every motor to prevent radio interference. Capacitors have been provided with the XL-5.
- **No Schottky Diodes:** External schottky diodes are not compatible with reversing speed controls. Using a schottky diode with the XL-5 will damage the ESC and void the 30-day warranty.

Recycling Your Traxxas Power Cell NiMH Battery

Traxxas strongly encourages you to recycle your Power Cell NiMH battery when it has reached the end of its useful life. **Do not throw your battery in the trash.** All Power Cell NiMH battery packs display the RBRC (Rechargeable Battery Recycling Corporation) icon, indicating they are recyclable. To find a recycling center near you, ask your local hobby dealer or visit www.call2recycle.org.

WARNING! CAUTION! DANGER!

FIRE HAZARD! Your model is able to use LiPo batteries. Charging and discharging batteries has the potential for fire, explosion, serious injury, and property damage if not performed per the instructions. Before use, read and follow all manufacturer's instructions, warnings, and precautions. In addition, Lithium Polymer (LiPo) batteries pose a SEVERE risk of fire if not properly handled per the instructions and require special care and handling procedures for long life and safe operation. LiPo batteries are intended only for advanced users that are educated on the risks associated with LiPo battery use. Traxxas does not recommend that anyone under the age of 14 use or handle LiPo battery packs without the supervision of a knowledgeable and responsible adult. Dispose of used batteries according to the instructions.

Important Warnings for users of Lithium Polymer (LiPo) batteries:

- LiPo batteries have a minimum safe discharge voltage threshold that should not be exceeded. The electronic speed control is equipped with built-in Low-Voltage Detection that alerts the driver when LiPo batteries have reached their minimum voltage (discharge) threshold. It is the driver's responsibility to stop immediately to prevent the battery pack from being discharged below its safe minimum threshold.
- Low-Voltage Detection is just one part of a comprehensive plan for safe LiPo battery use. It is critical to follow all instructions for safe and proper charging, use, and storage of LiPo batteries. Make sure you understand how to use your LiPo batteries. If you have questions about LiPo battery usage, please consult with your local hobby dealer or contact the battery manufacturer. As a reminder, all batteries should be recycled at the end of their useful life.
- ONLY use a Lithium Polymer (LiPo) balance charger with a balance adapter port to charge LiPo batteries. Never use NiMH or NiCad-type chargers or charge modes to charge LiPo batteries. DO NOT charge with a NiMH-only charger. The use of a NiMH or NiCad charger or charge mode will damage the batteries and may cause fire and personal injury.
- NEVER charge LiPo battery packs in series or parallel. Charging packs in series or parallel may result in improper charger cell recognition and an improper charging rate that may lead to overcharging, cell imbalance, cell damage, and fire.
- ALWAYS inspect your LiPo batteries carefully before charging. Look for any loose leads or connectors, damaged wire insulation, damaged cell packaging, impact damage, fluid leaks, swelling (a sign of internal damage), cell deformity, missing labels, or any other damage or irregularity. If any of these conditions are observed, do not charge or use the battery pack. Follow the disposal instructions included with your battery to properly and safely dispose of the battery.
- DO NOT store or charge LiPo batteries with or around other batteries or battery packs of any type, including other LiPos.
- Store and transport your battery pack(s) in a cool dry place. DO NOT store in direct sunlight. DO NOT allow the storage temperature to exceed 140°F or 60°C, such as in the trunk of a car, or the cells may be damaged and create a fire risk.
- DO NOT disassemble LiPo batteries or cells.
- DO NOT attempt to build your own LiPo battery pack from loose cells.

Charging and handling precautions for all battery types:

- Use the supplied NiMH charger to charge the included battery. DO NOT attempt to charge LiPo batteries or any other type of battery with this charger.
- BEFORE you charge, ALWAYS confirm that the charger settings exactly match the type (chemistry), specification, and configuration of the battery to be charged.
- DO NOT attempt to charge non-rechargeable batteries (explosion hazard), batteries that have an internal charge circuit or a protection circuit, batteries that have been altered from original manufacturer configuration, or batteries that have missing or unreadable labels, preventing you from properly identifying the battery type and specifications.
- DO NOT exceed the maximum manufacturer recommended charge rate.
- DO NOT let any exposed battery contacts or wires touch each other. This will cause the battery to short circuit and create the risk of fire.
- While charging or discharging, ALWAYS place the battery (all types of batteries) in a fire retardant/fire proof container and on a non-flammable surface such as concrete.

(continued on next page)

(continued from previous page)

- DO NOT charge batteries inside of an automobile. DO NOT charge batteries while driving in an automobile. This charger is equipped with a long cord intended to allow the battery to be charged outside of an automobile when using the automobile's auxiliary power socket. If the cord will not reach outside of the automobile, find another power source.
- NEVER charge batteries on wood, cloth, carpet, or on any other flammable material.
- ALWAYS charge batteries in a well-ventilated area.
- REMOVE flammable items and combustible materials from the charging area.
- DO NOT leave the charger and battery unattended while charging, discharging, or anytime the charger is ON with a battery connected. If there are any signs of a malfunction or in the event of an emergency, unplug the charger from the power source and disconnect the battery from the charger.
- DO NOT operate the charger in a cluttered space, or place objects on top of the charger or battery.
- If any battery or battery cell is damaged in any way, DO NOT charge, discharge, or use the battery.
- Keep a Class D fire extinguisher nearby in case of fire.
- DO NOT disassemble, crush, short circuit, or expose the batteries to flame or other source of ignition. Toxic materials could be released. If eye or skin contact occurs, flush with water.
- If a battery gets hot to the touch during the charging process (temperature greater than 110°F / 43°C), immediately disconnect the battery from the charger and discontinue charging.
- Allow the battery pack to cool off between runs (before charging).
- ALWAYS unplug the charger and disconnect the battery when not in use.
- ALWAYS unplug the battery from the electronic speed control when the model is not in use and when it is being stored or transported.
- DO NOT disassemble the charger.
- REMOVE the battery from your model or device before charging.
- DO NOT expose the charger to water or moisture.
- ALWAYS store battery packs safely out of the reach of children or pets. Children should always have adult supervision when charging and handling batteries.
- Nickel-Metal Hydride (NiMH) batteries must be recycled or disposed of properly.
- Always proceed with caution and use good common sense at all times.

Your model comes with a set of specialty metric tools. You'll need to purchase other items, available from your hobby dealer, to operate and maintain your model.

SUPPLIED TOOLS AND EQUIPMENT

2.5mm "L" wrench | 2.0mm "L" wrench | 1.5mm "L" wrench | 8mm/4mm wrench | U-joint wrench

4-way wrench | Body clips and body washers | Various pre-load spacers and shock pistons | NiMH battery charger* | 7-cell NiMH battery pack with Traxxas High-Current Connector*

REQUIRED EQUIPMENT
(SOLD SEPARATELY)

4 AA alkaline batteries

*Battery and charger style are subject to change and may vary from images.

For more information on batteries, see *Use the Right Batteries* on page 13.

Recommended Equipment
These items are not required for the operation of your model, but are a good idea to include in any R/C toolbox:
- Safety glasses
- Traxxas Ultra Premium Tire Glue, part #6468 (CA glue)
- Hobby knife
- Side cutters and/or needle nose pliers
- Phillips screwdriver
- Soldering iron

ANATOMY OF THE STAMPEDE 4X4

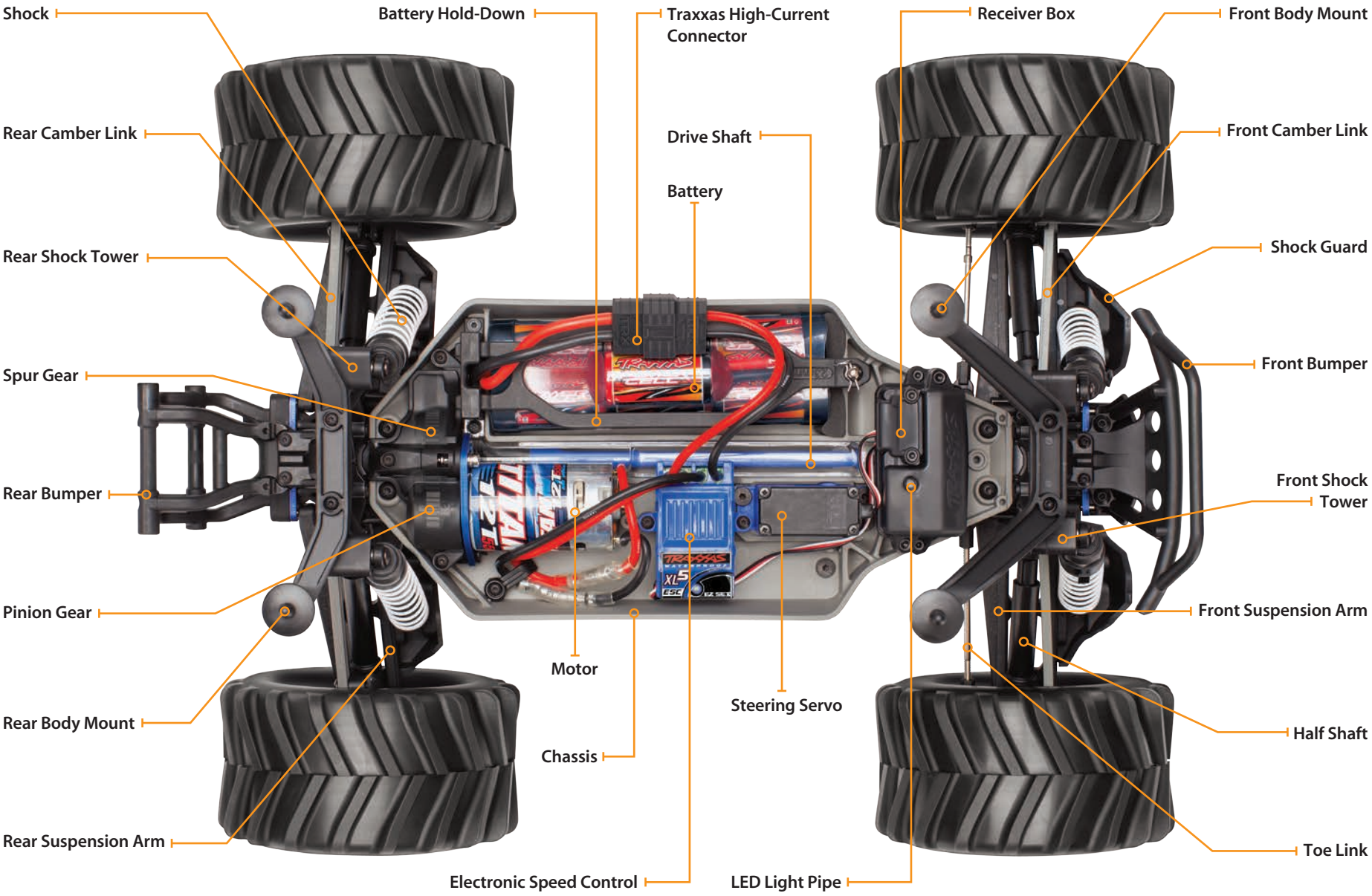

The following guide is an overview of the procedures for getting your model running. Look for the Quick Start logo on the bottom corners of Quick Start pages.

1. Read the safety precautions on pages 4-6

For your own safety, understand where carelessness and misuse could lead to personal injury.

2. Charge the battery pack • See page 13

Charge your battery now so it will be ready when you finish the other setup procedures.

3. Install batteries in the transmitter • See page 13

The transmitter requires 4 AA alkaline or rechargeable batteries (sold separately).

4. Install battery pack in the model • See page 14

Your model requires a fully charged 7.2-volt battery pack.

5. Turn on the radio system • See page 15

Make a habit of turning the transmitter on first and off last.

6. Check servo operation • See page 16

Make sure the steering servo is working correctly.

7. Range test the radio system • See page 16

Follow this procedure to make sure your radio system works properly at a distance and that there is no interference from outside sources.

8. Detail your model • See page 10

Apply other decals, if desired.

9. Drive your model • See page 21

Driving tips and adjustments for your model.

10. Maintaining your model • See page 28

Follow these critical steps to maintain the performance of your model and keep it in excellent running condition.

The Quick Start Guide is not intended to replace the full operating instructions available in this manual. Please read this entire manual for complete instructions on the proper use and maintenance of your model.

Look for the Quick Start logo at the bottom of Quick Start pages.

Applying the Decals

The main decals for your model have been applied at the factory. Additional decals have been printed on self-adhesive clear mylar and are die-cut for easy removal. Use a hobby knife to lift the corner of a decal and lift it from the backing.

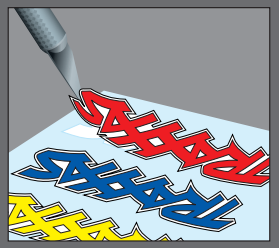

To apply the decals, place one end down, hold the other end up, and gradually smooth the decal down with your finger as you go. This will prevent air bubbles. Placing both ends of the decal down and then trying to smooth it out will result in air pockets. Look at the photos on the box for typical decal placement.

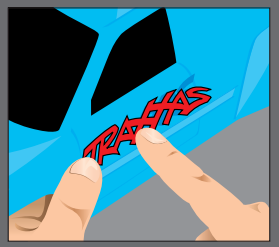

INTRODUCTION

Your model includes the TQ 2.4GHz transmitter. When powered on, the TQ 2.4GHz will automatically locate and lock onto an available frequency, allowing multiple models to be raced together without frequency conflicts. Just switch on and drive! The included TQ 2.4GHz radio system has been programmed for your model at the factory and does not require adjustment, but it does have settings you may need to access to maintain proper operation of your model. The detailed instructions (page 15) included in this manual will help you understand and operate the functions of the new TQ 2.4GHz radio system. For additional information and how-to videos, visit Traxxas.com.

RADIO AND POWER SYSTEM TERMINOLOGY

Please take a moment to familiarize yourself with these radio and power system terms. They will be used throughout this manual.

BEC (Battery Eliminator Circuit) - The BEC can either be in the receiver or in the ESC. This circuit allows the receiver and servos to be powered by the main battery pack in an electric model. This eliminates the need to carry a separate pack of 4 AA batteries to power the radio equipment.

Current - Current is a measure of power flow through the electronics, usually measured in amps. If you think of a wire as a garden hose, current is a measure of how much water is flowing through the hose.

ESC (Electronic Speed Control) - An electronic speed control is the electronic motor control inside the model. The XL-5 uses MOSFET power transistors to provide precise, digital proportional throttle control. Electronic speed controls use power more efficiently than mechanical speed controls so that the batteries run longer. An electronic speed control also has circuitry that prevents loss of steering and throttle control as the batteries lose their charge.

Frequency band - The radio frequency used by the transmitter to send signals to your model. This model operates on the 2.4GHz direct-sequence spread spectrum.

LiPo - Abbreviation for Lithium Polymer. Rechargeable LiPo battery packs are known for their special chemistry, which allows extremely high energy density and current handling in a compact size. These are high-performance batteries that require special care and handling. For advanced users only.

mAh – Abbreviation for milliamp hour, a measure of the capacity of the battery pack. The higher the number, the longer the battery will last between recharges.

Neutral position - The standing position that the servos seek when the transmitter controls are at the neutral setting.

NiCad - Abbreviation for nickel-cadmium. The original rechargeable hobby pack, NiCad batteries have very high current handling, high capacity, and can last up to 1000 charging cycles. Good charging procedures are required to reduce the possibility of developing a "memory" effect and shortened run times.

NiMH - Abbreviation for nickel-metal hydride. Rechargeable NiMH batteries offer high current handling and much greater resistance to the "memory" effect. NiMH batteries generally allow higher capacity than NiCad batteries. They can last up to 500 charge cycles. A peak charger designed for NiMH batteries is required for optimal performance.

Receiver - The radio unit inside your model that receives signals from the transmitter and relays them to the servos.

Resistance - In an electrical sense, resistance is a measure of how an object resists or obstructs the flow of current through it. When flow is constricted, energy is converted to heat and is lost.

Servos - Small motor units in your model that operate the steering and throttle mechanisms.

Transmitter - The hand-held radio unit that sends throttle and steering instructions to your model.

Trim - The fine-tuning adjustment of the neutral position of the servos, made by adjusting the steering trim knob on the face of the transmitter.

Thermal Shutdown Protection - Temperature sensing electronics are used in the ESC to detect overloading and overheating of the transistor circuitry. If excessive temperature is detected, the unit automatically shuts down to prevent damage to the electronics.

2-channel radio system - The TQ 2.4GHz radio system, consisting of the receiver, the transmitter, and the servos. The system uses two channels: one to operate the throttle and one to operate the steering.

2.4GHz Spread Spectrum – This model is equipped with the latest R/C technology. Unlike AM and FM systems that require frequency crystals and are prone to frequency conflicts, the TQ 2.4GHz system automatically selects and locks onto an open frequency, and offers superior resistance to interference and "glitching."

Voltage - Voltage is a measure of the electrical potential difference between two points, such as between the positive battery terminal and ground. Using the analogy of the garden hose, while current is the quantity of water flow in the hose, voltage corresponds to the pressure that is forcing the water through the hose.

550 and 540 - These numbers refer to the size of the motor. 550 motors have armatures that are 30% longer than 540 motors.

IMPORTANT RADIO SYSTEM PRECAUTIONS

- Do not kink the receiver antenna wire. Kinks in the antenna wire will reduce range.
- DO NOT CUT any part of the receiver antenna wire. Cutting the antenna will reduce range.
- You must extend the antenna wire in the model as far as possible for maximum range. In doing so, the antenna wire will be extended outside of the vehicle body. Do not wrap or coil the antenna wire to keep it from extending out of the body.
- The antenna wire must be installed into the antenna tube to protect it from getting cut or damaged, which will reduce range. When installing the antenna wire into the antenna tube, be careful not to kink the wire by pressing it against the antenna tube cap. The antenna wire should extend to just below or to within one-half inch below the cap.

To prevent loss of radio range, do not kink or cut the black wire, do not bend or cut the metal tip, and do not bend or cut the white wire at the end of the metal tip.

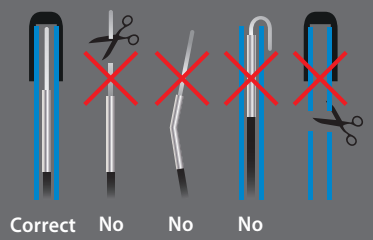

XL-5 Wiring Diagram

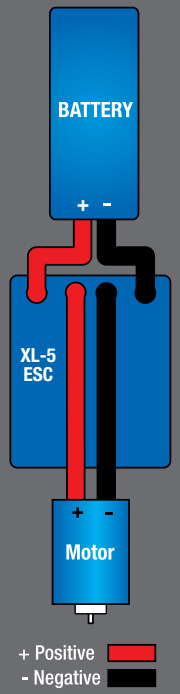

Your model is equipped with the Traxxas TQ 2.4GHz transmitter. The transmitter has two channels: Channel one operates the steering, and channel two operates the throttle. The receiver inside the model has three output channels. Your model is equipped with one servo and an electronic speed control.

TRANSMITTER AND RECEIVER

MODEL WIRING DIAGRAM

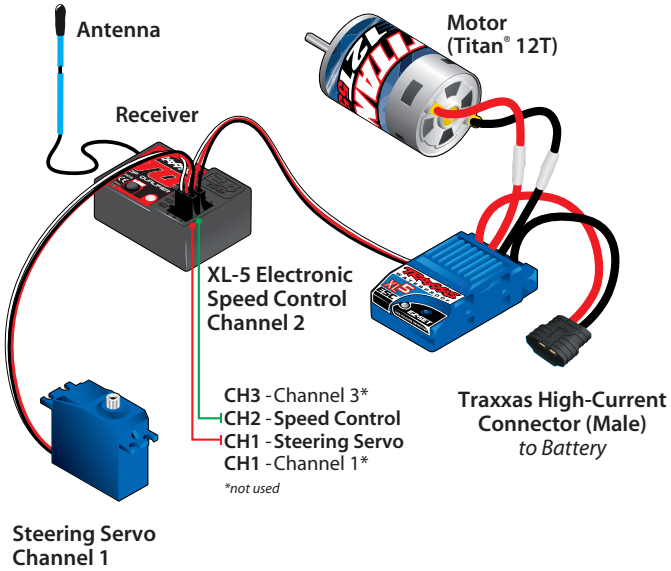

XL-5 ELECTRONIC SPEED CONTROL

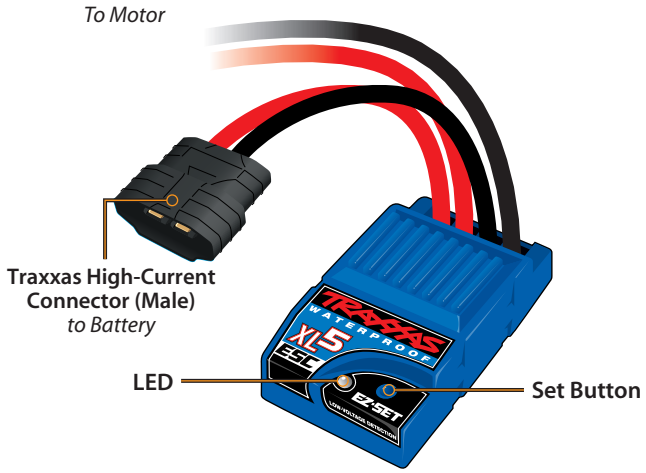

INSTALLING TRANSMITTER BATTERIES

Your TQ 2.4GHz transmitter uses 4 AA batteries. The battery compartment is located in the base of the transmitter.

1. Remove the battery compartment door by pressing the tab and sliding the door open.
2. Install the batteries in the correct orientation as indicated in the battery compartment.
3. Reinstall the battery compartment door and snap it closed.
4. Turn on the transmitter and check the status LED for a solid green light.

If the status LED flashes red, the transmitter batteries may be weak, discharged, or possibly installed incorrectly. Replace with new or freshly charged batteries. The status LED does not indicate the charge level of the battery pack installed in the model. Refer to the Troubleshooting section on page 17 for more information on the transmitter status LED codes.

CHARGING THE BATTERY PACK

The Traxxas Battery Charger is a fully featured NiMH (Nickle Metal Hydride) charger. It features 4-amp charge current for fast charging and advanced peak detection to optimize every charge. Take this compact charger with you wherever you want to have radio controlled fun! ***Do not charge batteries inside of an automobile. Read the Safety Precautions section of this manual.***

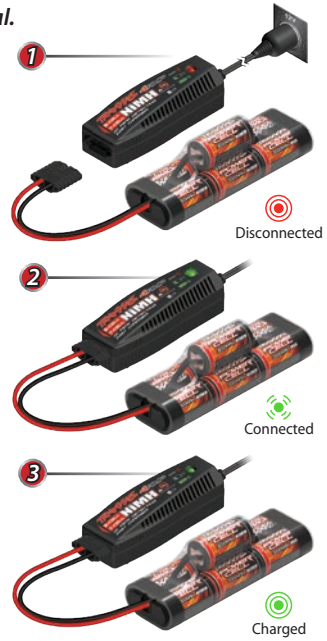

1. **Plug the charger into a 12-volt automotive auxiliary power socket.** The charger is compatible with 12-volt automotive auxiliary power sockets only. The LED on the charger will glow red to indicate it is ready to charge a battery.
2. **Connect the battery to begin charging.** Plug the battery into the charger. The charger's LED will flash green, indicating that charging has begun. The flashing green LED on the charger indicates the charge progress.
3. **Disconnect the battery when charging is complete.** The Traxxas 4-amp DC charger uses sophisticated voltage-detection circuitry to monitor the battery and automatically stop charging when the pack has reached maximum capacity. When the battery is fully charged, the LED will light solid green. The battery will be warm in your hand. Disconnect the battery.

CHARGE PROGRESS

x1	1 green flash	0 - 25% charged
x2	2 green flashes	25% - 50% charged
x3	3 green flashes	50% - 75% charged
x4	4 green flashes	75% or more charged
	Solid green LED	100% charged

CHARGER LED INDICATION	MEANING
Solid Red LED	Ready for Charging
Slowly Flashing Green LED	Charging (see Charge Progress chart)
Solid Green LED	Battery Fully Charged
Flashing Red LED	Charger error

The included charger is designed for use only with Traxxas NiMH batteries with iD. Legacy Traxxas High-Current Connectors are not compatible with this charger. DO NOT try to force legacy connectors into the charge connector.

If the status LED doesn't light green, check the polarity of the batteries. Check rechargeable batteries for a full charge. If you see any other flashing signal from the LED, refer to the chart on page 17 to identify the code.

Use the Right Batteries

Your transmitter uses AA batteries. Use new alkaline batteries (Part # 2914) or rechargeable batteries, such as NiMH (nickel-metal hydride) batteries, in your transmitter. Make sure rechargeable batteries are fully charged according to the manufacturer's instructions.

If you use rechargeable batteries in your transmitter, be aware that when they begin to lose their charge, they lose power more quickly than regular alkaline batteries.

Caution: Discontinue running your model at the first sign of weak batteries (flashing red light) to avoid losing control.

Battery iD
Your model's included battery pack is equipped with Traxxas Battery iD. This exclusive feature allows Traxxas battery chargers (sold separately) to automatically recognize connected battery packs and optimize the charge settings for the battery. This eliminates the need to worry over charger settings and menus for the easiest and safest charging solution possible. Visit Traxxas.com to learn more about this feature and available Traxxas iD chargers and batteries.

INSTALLING THE BATTERY PACK

Install the battery pack with the battery wires facing the rear of the model. Insert the tabs of the battery hold-down into the slots in the rear hold-down retainer and then place the battery hold-down over the post. Secure the battery hold-down with a body clip in the hole in the post. **Do not connect the battery pack yet.**

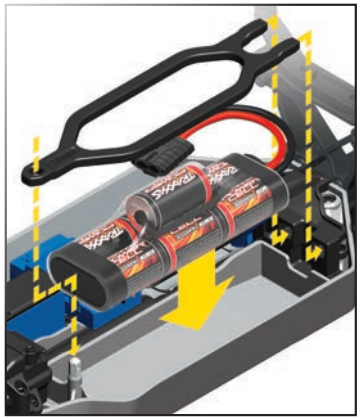

Using a Different Battery Configuration

The battery hold-down is capable of accommodating side-by-side racing style packs, "hump packs" with a stacked seventh cell, or the more common stick packs. The battery compartment is configured for stick packs from the factory. The number on each side of the hold-down indicates the battery height in millimeters that hold-down can accommodate. Note that one side is labeled "25" and the other side is labeled "23". The 25mm side is for use with typical stick type battery packs. If you are using side-by-side racing packs, simply flip the hold-down over to the 23mm side and use it on the opposite side of the chassis. Note: For taller batteries, an extended battery hold-down, part #6727X, is available (sold separately). For shorter batteries (6-cell), use the included foam block in the front of the battery compartment.

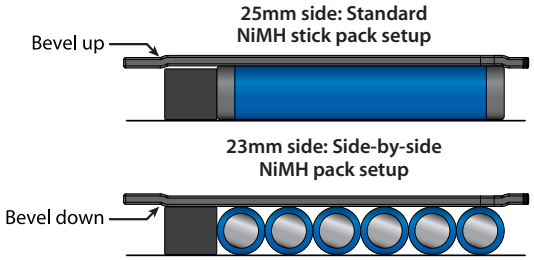

The Traxxas High-Current Connector

Your model is equipped with the Traxxas High-Current Connector. Standard connectors restrict current flow and are not capable of delivering the power needed to maximize the output of the electronic speed control. The Traxxas connector's gold-plated terminals with large contact surfaces ensure positive current flow with the least amount of resistance. Secure, long-lasting, and easy to grip, the Traxxas connector is engineered to extract all the power your battery has to give.

RADIO SYSTEM CONTROLS

RADIO SYSTEM RULES

- Always turn your transmitter on first and off last. This procedure will help to prevent your model from receiving stray signals from another transmitter, or other source, and running out of control. Your model has electronic Failsafes to prevent this type of malfunction, but the first, best defense against a runaway model is to always turn the transmitter on first and off last.

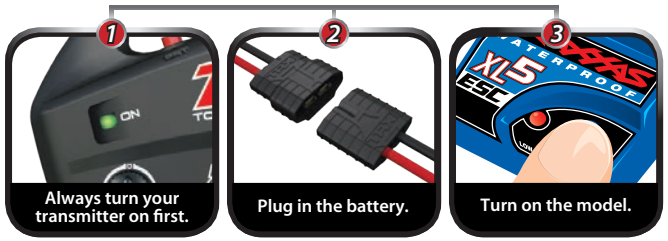

- Always use new or freshly charged batteries for the radio system. Weak batteries will limit the radio signal between the receiver and the transmitter. Loss of the radio signal can cause you to lose control of your model.
- In order for the transmitter and receiver to bind to one another, the receiver in the model must be turned on within 20 seconds of turning on the transmitter. The transmitter LED will flash fast red, indicating a failure to link. If you miss it, simply turn off the transmitter and start over.
- Always turn on the transmitter before plugging in the battery.

RADIO SYSTEM BASIC ADJUSTMENTS

Steering Trim

The steering trim knob located on the face of the transmitter adjusts the neutral (center) point of the steering channel. If your model pulls to the right or left when the steering wheel is centered, turn the knob until the model drives straight when the steering wheel is centered.

Channel Reversing

The TQ 2.4GHz transmitter has been programmed with the correct servo direction settings for your model and should not require adjustment. These instructions are for reference and troubleshooting only.

Reversing a channel reverses the direction of the corresponding servo. For example, if you turn the steering wheel to the right and the model turns left, Channel 1 would need to be reversed to correct the servo direction. Use the following procedures to reverse the steering and throttle channels, if necessary. ***Servo reversing should only be required if you accidentally reset the direction of a channel. Do not reverse the steering or throttle channels unless necessary.***

Steering reversing procedure:

1. Press and hold the SET button on the transmitter for two seconds. The status LED will flash green.
2. Turn and hold the steering wheel to the full left or full right position (it does not matter which position you choose).
3. While holding the steering wheel in position, press the SET button to reverse the channel.
4. The channel is now reversed. Confirm correct servo operation before running your model.

Remember, always turn the transmitter on first and off last to avoid damage to your model.

When rechargeable batteries begin to lose their charge, they will fade much faster than alkaline dry cells. Stop immediately at the first sign of weak batteries. Never turn the transmitter off when the battery pack is plugged in. The model could run out of control.

Using Reverse: While driving, push the throttle trigger forward to apply brakes. Once stopped, return the throttle trigger to neutral. Push the throttle trigger forward again to engage proportional reverse.

Throttle reversing procedure:

Note: Throttle reversing is often times unnecessary on electric models, as issues with the throttle can usually be solved by reprogramming the speed control and/or verifying that the motor is wired correctly. Before attempting to reverse the throttle channel using the procedure below, you should first recalibrate the speed control. Refer to "*XL-5 Setup Programming*" on page 18.

1. Press and hold the SET button on the transmitter for two seconds. The status LED will flash green.
2. Move and hold the throttle trigger to the full forward or full brake position (it does not matter which position you choose).
3. While holding the throttle trigger in position, press the SET button to reverse the channel.
4. The channel is now reversed. Recalibrate the speed control and then confirm correct servo operation before running your model.

USING THE RADIO SYSTEM

The TQ 2.4GHz Radio System has been adjusted at the factory for correct operation with your model. The adjustment should be checked before running the model, in case of movement during shipping. Here's how:

1. Turn the transmitter switch on. The status LED on the transmitter should be solid green (not flashing).
2. **Elevate the model so that the rear tires are off the ground.** If you are holding the model, grip it firmly. Make sure your hands are clear of the moving parts of the model.
3. Plug the battery pack in the model into the speed control.
4. Press and release the EZ-Set button on the speed control to turn the model on. The speed control's LED will glow red. To turn the speed control off, press the EZ-Set button until the LED turns off.

   Note: If the LED shines green after the speed control is turned on, Low-Voltage Detection is activated. This may cause poor performance from NiMH battery packs. Make sure to turn the Low-Voltage Detection on when using LiPo batteries. **Never use LiPo batteries while Low-Voltage Detection is turned off.** See page 18 for more information.
5. Turn the steering wheel on the transmitter back and forth and check for rapid operation of the steering servo. Also, check that the steering mechanism is not loose or binding. If the steering operates slowly, check for weak batteries.
6. When looking down at the model, the front wheels should be pointing straight ahead. If the wheels are turned slightly to the left or right, slowly adjust the steering trim control on the transmitter until they are pointing straight ahead.

7. Operate the throttle trigger to ensure that you have full forward and reverse operation, and that the motor stops when the throttle trigger is at neutral.
8. Once adjustments are made, turn off your model, followed by the hand-held transmitter.

Range-Testing the Radio System

Before each running session with your model, you should range-test your radio system to ensure that it operates properly.

1. Turn on the radio system and check its operation as described in the previous section.
2. Have a friend hold the model. Make sure hands and clothing are clear of the wheels and other moving parts on the model.
3. Walk away from the model with the transmitter until you reach the farthest distance you plan to operate the model.
4. Operate the controls on the transmitter once again to be sure that the model responds correctly.
5. Do not attempt to operate the model if there is any problem with the radio system or any external interference with your radio signal at your location.

The TQ 2.4GHz transmitter has a directional antenna. For maximum range, hold the transmitter upright and pointed in the direction of the model. Pointing the transmitter away from the model will reduce radio range.

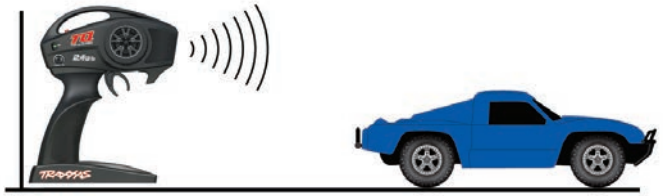

Higher Speeds Require Greater Distance

The faster you drive your model, the more quickly it will near the limit of radio range. At top speeds, models can cover anywhere between 25 to 100 feet every second! It's a thrill, but use caution to keep your model in range. If you want to see your model achieve its maximum speed, it is best to position yourself in the middle of the truck's running area, not the far end, so you drive the truck towards and past your position. In addition to maximizing the radio's range, this technique will keep your model closer to you, making it easier to see and control.

Your model's radio system is designed to operate reliably up to the approximate distance that it is no longer easy or comfortable to see and control the model. Most drivers will struggle to see and drive their model at distances farther than a football field (300+ feet). At greater distances, you could lose sight of your model and you may also exceed the radio system's operating range which will cause the Failsafe system to activate. For best visibility and control of your model keep your model within 200 feet, regardless of the maximum range available.

No matter how fast or far you drive your model, always leave adequate space between you, the model, and others. Never drive directly toward yourself or others.

TQ 2.4GHz Binding Instructions

For proper operation, the transmitter and receiver must be electronically 'bound.' **This has been done for you at the factory.** Should you ever need to re-bind the system or bind to an additional transmitter or receiver, follow these instructions. **Note**: the receiver must be connected to a 4.8-6.0v (nominal) power source for binding and the transmitter and receiver must be within 5 feet of each other.

1. Press and hold the SET button on the transmitter.
2. Turn on the transmitter and release the SET button. The status LED will flash red slowly, indicating that the transmitter is in bind mode.
3. Press and hold the LINK button on the receiver.
4. Turn on the speed control by pressing the EZ-Set button and release the LINK button.
5. When the LEDs on both the transmitter and the receiver turn solid green, the system is bound and ready for use. Confirm that the steering and throttle operate properly before driving your model.

Failsafe
Your Traxxas radio system is equipped with a built-in Failsafe function that returns the throttle to its last saved neutral position in the event of a signal loss. The LED on the transmitter and the receiver will rapidly flash red when the Failsafe mode is activated. If Failsafe activates while you are operating your model, determine the reason for signal loss and resolve the problem before operating your model again.

TRANSMITTER LED CODES

LED Color / Pattern	Name	Notes
Solid green	Normal Driving Mode	See page 15 for information on how to use the transmitter controls.
Slow red (0.5 sec on / 0.5 sec off)	Binding	See this page for more information on binding.
Flashing medium red (0.25 sec on / 0.25 sec off)	Low Battery Alarm	Put new batteries in the transmitter. See page 13 for more information.
Flashing fast red (0.125 sec on / 0.125 sec off)	Link Failure / Error	Transmitter and receiver are no longer bound. Turn the system off and then back on to resume normal operation. Find source of the link failure (i.e., out of range, low batteries, damaged antenna).

RECEIVER LED CODES

LED Color / Pattern	Name	Notes
Solid green	Normal Driving Mode	See page 15 for information on how to use your transmitter controls.
Slow red (0.5 sec on / 0.5 sec off)	Binding	See this page for more information on binding.
Flashing fast red (0.125 sec on / 0.125 sec off)	Failsafe / Low-Voltage Detect	Consistent low voltage in the receiver triggers Failsafe so that there is enough power to center the throttle servo before it completely loses power.

XL-5 Specifications

Input Voltage
4-7 cells NiMH; 2S LiPo

Case Size
1.23"W x 2.18"L x 0.75"H

Weight
2.0 ounces / 57 grams

Motor Limit
15-turns (540 Size) /
12-turns (550 Size)

On Resistance Forward
0.005 Ohms

On Resistance Reverse
0.014 Ohms

Peak Current - Forward
100A

Peak Current - Reverse
60A

Braking Current
60A

Continuous Current
15A

BEC Voltage
6.0 VDC

BEC Current
1A

Power Wire
14 Gauge / 5"

Input Harness Wire
26 Gauge / 9"

Transistor Type
MOSFET

PWM Frequency
1700 Hz

Thermal Protection
Thermal Shutdown

Single Button Setup
Yes

Low-Voltage Detection
Yes (User Enabled)

XL-5 Battery Settings (Low-Voltage Detection Setting)
The XL-5 electronic speed control is equipped with built-in Low-Voltage Detection. The Low-Voltage Detection circuitry constantly monitors the battery voltage. When the battery voltage begins to reach the minimum recommended discharge voltage threshold for LiPo battery packs, the XL-5 will limit the power output to 50% throttle. When the battery voltage attempts to fall below the minimum threshold, the XL-5 will shut down all motor output. The LED on the speed control will slowly blink red, indicating a low-voltage shutdown. The XL-5 will stay in this mode until a fully charged battery is connected.

Your model includes a Power Cell NiMH battery. The XL-5 speed control's Low-Voltage Detection has been disabled for best performance with this battery. The speed control's LED will glow red when it is turned on, indicating Low-Voltage Detection is disabled. Be certain to activate Low-Voltage Detection if you install LiPo batteries in your model. **Never use LiPo batteries while Low-Voltage Detection is disabled.**

Verify that Low-Voltage Detection is DISABLED:
1. Turn on the transmitter (with the throttle at neutral).
2. Connect a fully charged battery pack to the XL-5.
3. Press and release the EZ-Set button to turn the XL-5 on. If the LED is solid red, then the Low-Voltage Detection is DISABLED (not safe to use LiPo batteries). If the LED is solid green, then Low-Voltage Detection is ACTIVATED.

To activate Low-Voltage Detection (LiPo setting):
1. Make sure the LED on the XL-5 is on and RED.
2. Press and hold the EZ-Set button (the LED will turn off). After ten seconds, the motor will beep twice and the LED will shine GREEN. Release the button.

3. Low-Voltage Detection is now ACTIVATED.

To disable Low-Voltage Detection (NiMH setting):
1. Make sure the LED on the XL-5 is on and GREEN.
2. Press and hold the EZ-Set button (the LED will turn off). After ten seconds, the motor will beep three times and the LED will shine RED. Release the button.

3. Low-Voltage Detection is now DISABLED.

XL-5 Setup Programming (Calibrating your ESC and transmitter)
Read through all of the programming steps before you begin. If you get lost during programming or receive unexpected results, simply unplug the battery, wait a few seconds, plug the battery pack in, and start over.

1. Disconnect one of the motor wires between the XL-5 and the motor. This is a precaution to prevent runaway when the speed control is turned on before it is programmed.
2. Connect a fully charged battery pack to the XL-5.
3. Turn on the transmitter (with the throttle at neutral).
4. Press and hold the EZ-Set button (A). The LED will first turn green and then red. Release the button.
5. When the LED blinks RED ONCE, pull the throttle trigger to the full throttle position and hold it there (B).
6. When the LED blinks RED TWICE, push the throttle trigger to the full reverse and hold it there (C).
7. When the LED blinks GREEN ONCE, programming is complete. The LED will then shine green or red (depending on Low-Voltage Detection setting), indicating the XL-5 is on and at neutral (D).

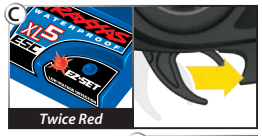

XL-5 Operation

To operate the speed control and test the programming, reconnect the motor wires and place the vehicle on a stable block or stand so that all of the driven wheels are off the ground.

Note that in steps 1-8 below, Low-Voltage Detection is DISABLED (factory default) and the LED shines red. If Low-Voltage Detection is ACTIVATED, the LED will shine green instead of red in steps 1-8 below. ***Never use LiPo batteries while Low-Voltage Detection is disabled.***

1. With the transmitter on, press and release the EZ-Set button. The LED will shine RED. This turns the XL-5 on. If you press and release too quickly, you may hear the steering servo jump but the LED may not stay on. Simply press the button again until the LED shines RED and then release.
2. Apply forward throttle. The LED will turn off until full throttle power is reached. At full throttle, the LED will shine RED.
3. Move the trigger forward to apply the brakes. Note that braking control is fully proportional. The LED will turn off until full braking power is reached. At full brakes, the LED will shine RED.
4. Return the throttle trigger to neutral. The LED will shine RED.
5. Move the throttle trigger forward again to engage reverse (Profile #1). The LED will turn off. Once full reverse power is reached, the LED will shine RED.
6. To stop, return the throttle trigger to neutral. Note that there is no programmed delay when changing from reverse to forward. Use caution to avoid slamming the speed control from reverse to forward. On high-traction surfaces, this could result in transmission or driveline damage.
7. To turn the XL-5 off, press and hold the EZ-Set button for 1½ seconds or until the red LED turns off.
8. The XL-5 is equipped with thermal shutdown protection to guard against overheating caused by excessive current flow. If the operating temperature exceeds safe limits, the XL-5 will automatically shut down. The LED on the face of the XL-5 will rapidly blink red, even if the throttle trigger is moved back and forth. Once the temperature returns to a safe level, the XL-5 will once again function normally.

XL-5 Profile Selection

The speed control is factory set to Sport Mode (100% forward, brakes, and reverse). To disable reverse (Race Mode) or to allow 50% power (patented Training Mode), follow these steps. The speed control should be connected to the receiver and the transmitter adjusted as described previously. The profiles are selected by entering the programming mode.

Profile Description

Profile #1 (Sport Mode): 100% Forward, 100% Brakes, 100% Reverse
Profile #2 (Race Mode): 100% Forward, 100% Brakes, No Reverse
Profile #3 (Training Mode): 50% Forward, 100% Brakes, 50% Reverse

Selecting Sport Mode

(Profile #1: 100% Forward, 100% Brakes, 100% Reverse)

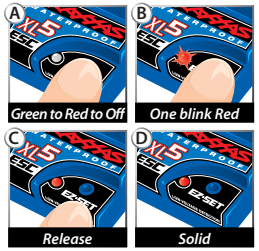

1. Connect a fully charged battery pack to the XL-5 and turn on your transmitter.
2. With the XL-5 off, press and hold the EZ-Set button until the LED turns solid green, then solid red and then begins blinking red (indicating the Profile numbers).
3. When the LED blinks RED ONCE, release the EZ-Set button.
4. The LED will blink and then turn solid green (Low-Voltage Detection ACTIVE) or red (Low-Voltage Detection DISABLED). The model is ready to drive.

Selecting Race Mode

(Profile #2: 100% Forward, 100% Brakes, No Reverse)

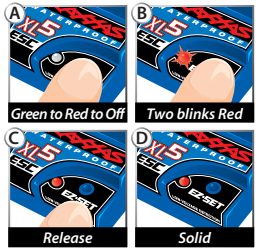

1. Connect a fully charged battery pack to the XL-5 and turn on your transmitter.
2. With the XL-5 off, press and hold the EZ-Set button until the LED turns solid green, then solid red and then begins blinking red (indicating the Profile numbers).
3. When the LED blinks RED TWICE, release the EZ-Set button.
4. The LED will blink and then turn solid green (Low-Voltage Detection ACTIVE) or red (Low-Voltage Detection DISABLED). The model is ready to drive.

Patented Training Mode (Profile #3) reduces forward and reverse throttle by 50%. Training Mode is provided to reduce the power output, allowing beginning drivers to better control the model. As driving skills improve, simply change to Sport or Race Mode for full-power operation.

Tip For Fast Mode Changes
The XL-5 is set to Profile 1 (Sport Mode) as the default. To quickly change to Profile 3 (Training Mode), with the transmitter on, press and hold the EZ-Set button until the light blinks red three times and then release. For full power, quickly change back to Profile 1 (Sport Mode) by pressing and holding the EZ-Set button until the light blinks red one time and then releasing.

Throttle Neutral Protection
The XL-5 speed control features Throttle Neutral Protection, which prevents the model from suddenly accelerating if the speed control is switched on while the transmitter's trigger is being held. When the trigger is returned to neutral, the XL-5 will operate properly.

Selecting Training Mode

(Profile #3: 50% Forward, 100% Brakes, 50% Reverse)

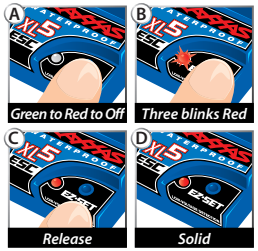

1. Connect a fully charged battery pack to the XL-5 and turn on your transmitter.
2. With the XL-5 off, press and hold the EZ-Set button until the LED turns solid green, then solid red and then begins blinking red (indicating the Profile numbers).
3. When the LED blinks RED THREE TIMES, release the EZ-Set button.
4. The LED will blink and then turn solid green (Low-Voltage Detection ACTIVE) or red (Low-Voltage Detection DISABLED). The model is ready to drive.

Note: If you missed the mode you wanted, keep the EZ-Set button pressed down and the blink cycle will repeat until the button is released and a Mode is selected.

LED Codes and Protection Modes

- **Solid Green:** XL-5 power-on light. Low-Voltage Detection is ACTIVATED (LiPo setting).

- **Solid Red:** XL-5 power-on light. Low-Voltage Detection is DISABLED (NiMH setting). **Never use LiPo batteries while Low-Voltage Detection is disabled.**

- **Fast Blinking Red:** The XL-5 is equipped with thermal shutdown protection to guard against overheating caused by excessive current flow. If the operating temperature exceeds safe limits, the XL-5 will automatically shut down. Let the XL-5 cool. Make sure your model is properly geared for the conditions.

- **Slow Blinking Red (when Low-Voltage Detection is activated):** The XL-5 has entered Low-Voltage Protection. When the battery voltage begins to reach the minimum recommended discharge voltage threshold for LiPo battery packs, the XL-5 will limit the power output to 50% throttle. When the battery voltage attempts to fall below the minimum threshold, the XL-5 will shut down all motor output. The LED on the speed control will slowly blink red, indicating a low-voltage shutdown. The XL-5 will stay in this mode until a fully charged battery is connected.

- **Fast Blinking Green:** The XL-5's LED will blink fast green if the speed control is not receiving a signal. Make certain the speed control is properly plugged into the receiver and the transmitter is switched on.

Now it's time to have some fun! This section contains instructions on driving and making adjustments to your model. **Before you go on, here are some important precautions to keep in mind.**

- Allow the model to cool for a few minutes between runs. This is particularly important when using high-capacity (2400mAh and above) battery packs that allow extended periods of running. Monitoring temperatures will extend the lives of the batteries and motor.
- Do not continue to operate the model with low batteries or you could lose control of it. Indications of low battery power include slow operation and sluggish servos (slow to return to center). Stop immediately at the first sign of weak batteries. When the batteries in the transmitter become weak, the red power light will begin to flash. Stop immediately and install new batteries.
- Do not drive the model at night, on public streets, or in large crowds of people.
- If the model becomes stuck against an object, do not continue to run the motor. Remove the obstruction before continuing. Do not push or pull objects with the model.
- Because the model is controlled by radio, it is subject to radio interference from many sources beyond your control. Since radio interference can cause momentary losses of control, allow a safety margin of space in all directions around the model in order to prevent collisions.
- Use good, common sense whenever you are driving your model. Intentionally driving in an abusive and rough manner will only result in poor performance and broken parts. Take care of your model so that you can enjoy it for a long time to come.
- The Titan 12T motor will benefit from a short break-in period to ensure optimum performance and longer motor life. For the first battery pack, use the stock installed pinion gear and drive smoothly on a flat, paved surface. Accelerate smoothly (avoiding full throttle starts), with most of the driving being done at higher speeds. This will help ensure that the motor provides the best performance and longest life.

About Run Time

A large factor affecting run time is the type and condition of your batteries. The milliamp hour (mAh) rating of the batteries determines how large their "fuel tank" is. A 3000 mAh battery pack will theoretically run twice as long as a 1500 mAh sport pack. Because of the wide variation in the types of batteries that are available and the methods with which they can be charged, it's impossible to give exact run times for the model.

Another major factor that affects run time is how the model is driven. Run times may decrease when the model is driven repetitively from a stop to top-speed and with repetitive hard acceleration.

Tips for Increasing Run Time

- Use batteries with the highest mAh rating you can purchase.
- Use a high-quality peak-detecting charger.
- Read and follow all maintenance and care instructions provided by the manufacturer of your batteries.
- Vary your speed. The Titan12T is a fan cooled motor, therefore moderate to top-speed running helps reduce motor temperatures.
- Maintain your model. Do not allow dirt or damaged parts to cause binding in the drivetrain. Keep the motor clean and the motor bushings lightly lubricated.

mAh Ratings and Power Output

The mAh rating of the battery can affect your top speed performance. The higher capacity battery packs experience less voltage drop under heavy load than low mAh rated packs. The higher voltage potential allows increased speed until the battery begins to become discharged.

RUNNING IN WET CONDITIONS

Your new Traxxas model is designed with water-resistant features to protect the electronics in the model (receiver, servos, electronic speed control). This gives you the freedom to have fun driving your model through puddles, wet grass, snow, and through other wet conditions. Though highly water resistant, the model should not be treated as though it is submersible or totally, 100% waterproof. Water resistance applies only to the installed electronic components. Running in wet conditions requires additional care and maintenance for the mechanical and electrical components to prevent corrosion of metal parts and maintain their proper function.

Precautions

- **Without proper care, some parts of your model can be seriously damaged due to contact with water. Know that additional maintenance procedures will be required after running in wet conditions in order to maintain the performance of your model. Do not run your model in wet conditions if you are not willing to accept the additional care and maintenance responsibilities.**
- Not all batteries can be used in wet environments. Consult your battery manufacturer to see if their batteries can be used in wet conditions.
- The Traxxas TQ 2.4GHz transmitter is not water resistant. Do not subject it to wet conditions such as rain.

- Do not operate your model during a rain storm or other inclement weather where lightning may be present.
- Do NOT allow your model to come in contact with salt water (ocean water), brackish water (between fresh water and ocean water), or other contaminated water. Salt water is highly conductive and highly corrosive. Use caution if you plan to run your model on or near a beach.
- Even casual water contact can reduce the life of your motor. Special care must be taken to modify your gearing and/or your driving style in wet conditions to extend the life of the motor (details follow).

Before Running Your Vehicle in Wet Conditions

1. Consult the section "After Running Your Vehicle in Wet Conditions" before proceeding. Make sure you understand the additional maintenance required with wet running.
2. The wheels have small holes molded in to allow air to enter and exit the tire during normal running. Water will enter these holes and get trapped inside the tires if holes are not cut in the tires. Cut two small holes (3mm or 1/8" diameter) in each tire. Each hole should be near the tire centerline, 180° apart.
3. Confirm that the receiver box O-ring and cover are installed correctly and secure. Make sure the screws are tight and the blue O-ring is not visibly protruding from the edge of the cover.
4. Confirm that your batteries can be used in wet conditions.

Motor Precautions

- Titan motor life can be greatly reduced in mud and water. If the motor gets excessively wet or submerged, use very light throttle (run the motor slowly) until the excess water can run out. Applying full throttle to a motor full of water can cause rapid motor failure. Your driving habits will determine motor life with a wet motor. Do not submerge the motor under water.
- Do not gear the motor by temperature when running in wet conditions. The motor will be cooled by water contact and will not give an accurate indication of appropriate gearing.

After Running Your Vehicle in Wet Conditions

1. Drain the tires by spinning the tires at high speed to "sling" the water out. One way to do this is to make several high-speed passes on a flat, dry surface, if possible.
2. Remove the batteries.
3. Rinse excess dirt and mud off the truck with low-pressure water, such as from a garden hose. Do NOT use pressure washer or other high-pressure water. Avoid directing water into the bearings, transmission, etc.
4. Blow off the truck with compressed air (optional, but recommended). Wear safety glasses when using compressed air.
5. Remove the wheels from the truck.
6. Spray all the bearings, drivetrain, and fasteners with WD-40® or similar water displacing light oil.
7. Let the truck stand or you may blow off with compressed air. Placing the truck in a warm, sunny spot will aid drying. Trapped water and oil will continue to drip from the truck for a few hours. Place it on a towel or piece of cardboard to protect the surface underneath.
8. As a precautionary step, remove the sealed receiver box cover. While unlikely, humidity or tiny amounts of moisture or condensation may enter the receiver box during wet running. This can cause long-term problems with the sensitive electronics in the receiver. Removing the receiver box cover during storage allows the air inside to dry. This step can improve the long-term reliability of the receiver. It is not necessary to remove the receiver or unplug any of the wires.
9. **Additional Maintenance**: Increase your frequency of disassembly, inspection, and lubrication of the following items. This is necessary after extended wet use or if the vehicle will not be used for an extended period of time (such as a week or longer). This additional maintenance is needed to prevent any trapped moisture from corroding internal steel components.
   - **Stub axle housing bearings**: Remove, clean, and re-oil the bearings.
   - **Spur and pinion gears:** Inspect the gears for wear, broken teeth, or any debris lodged between the teeth. You do not need to lubricate the gears.
   - **Titan motor**: Remove the motor, clean with aerosol motor cleaner, and re-oil the bushings with lightweight motor oil. Be sure to wear eye protection when using spray aerosol cleaners.

RECEIVER BOX: MAINTAINING A WATERTIGHT SEAL

Removing and Installing Radio Gear

The unique design of the receiver box allows the removal and installation of the receiver without losing the ability to maintain a watertight seal in the box. The patent-pending wire clamp feature gives you the ability to also install aftermarket radio systems and maintain the watertight features of the receiver box.

Removing the Receiver

1. Remove the wire clamp by removing the two 2.5x8mm cap screws.
2. Remove the cover by removing the two 3x10mm cap screws.
3. To remove the receiver from the box, simply lift it out and set to the side. The antenna wire is still inside the clamp area and cannot be removed yet.
4. Unplug the servo cables from the receiver and remove the receiver.

Receiver Installation

1. Install the electronic speed control (ESC), servo, and antenna wiring through the receiver box top (A).
2. Plug the ESC and servo wires into the receiver (*see page 12*).
3. Bundle wiring as necessary.
4. Make sure the O-ring is properly seated into the groove in the receiver box bottom so that the cover will not pinch it or damage it in any way.
5. Place the receiver box top onto the receiver box bottom and install and tighten the two 3x10mm cap screws securely.
6. Inspect the cover to make sure that the O-ring seal is not visible.
7. Arrange the wires neatly using the wire guides on the receiver box top (B). Excess ESC and servo wiring should be bundled inside the receiver box. Pull out all available antenna wiring from the receiver box.
8. Apply a small bead of silicone grease to the foam on the wire clamp (C).
9. Install the wire clamp and tighten the two 2.5x8mm cap screws securely (D).

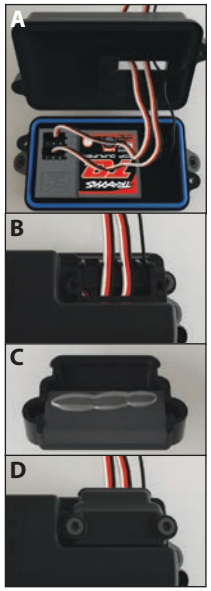

SETTING UP THE ANTENNA

The receiver antenna has been set up and installed from the factory. The antenna is secured by a 3x4mm set screw. To remove the antenna tube, simply remove the set screw with the included 1.5mm wrench.

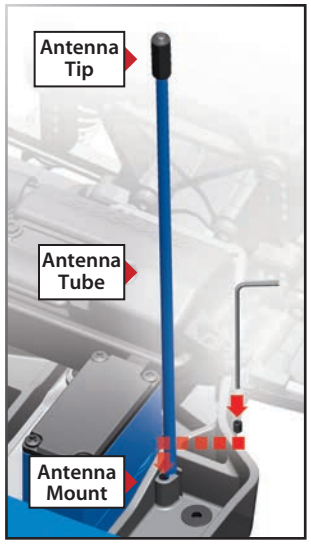

When reinstalling the antenna, first slide the antenna wire into the bottom of the antenna tube until the white tip of the antenna is at the top of the tube under the black cap. Next insert the antenna tube into the mount while making sure that antenna wire is in the slot in the antenna mount, then install the set screw next to the antenna tube. Use the supplied 1.5mm wrench to tighten the screw just until the antenna tube is securely in place. Do not over tighten. **Do not bend or kink the antenna wire! See the sidebar for more information. Do not shorten the antenna tube.**

To prevent loss of radio range, do not kink or cut the black wire, do not bend or cut the metal tip, and do not bend or cut the white wire at the end of the metal tip.

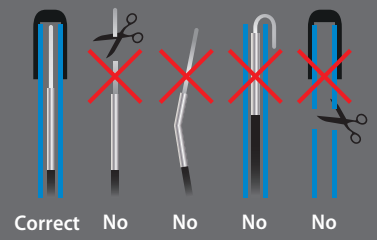

Rear toe-in can be adjusted using accessory rear axle carriers, part #1952X. These can add or remove 1.5° toe per side, for a total of 0 to 3 degrees per side.

Once you become familiar with driving your model, you might need to make adjustments for better driving performance.

Adjusting Gear Mesh

Incorrect gear mesh is the most common cause of stripped spur gears. Gear mesh should be checked and adjusted anytime a gear is replaced. Access the gears by removing the single screw on the gear cover.

To set the gear mesh, loosen the motor screw. Cut a narrow strip of notebook paper and run it into the gear mesh. Slide the motor and pinion gear into the spur gear. Retighten the motor screws and then remove the strip of paper. You should be able to run a fresh strip of paper through the gears without binding them.

Adjusting the Toe-in

Geometry and alignment specs play an important role in your model's handling. Take the time to set them correctly. Set the steering trim on your transmitter to neutral. Now, adjust your servo and tie rods so that both wheels are pointing straight ahead and are parallel to each other (0° toe-in). This will ensure the same amount of steering in both directions. For increased stability add 1° to 2° of toe-in to each front wheel. Use the turnbuckles to adjust the alignment.

Toe Base Factory Settings
Front: 0-degrees
Rear: 1.5-degrees

Shock Mounting Positions

Big bumps and rough terrain require a softer suspension with the maximum possible suspension travel and ride height. Racing on a prepared track or on-road use requires a lower ride height and firmer, more progressive suspension settings. The more progressive suspension settings help reduce body roll (increased roll stiffness), dive during braking, and squat during acceleration.

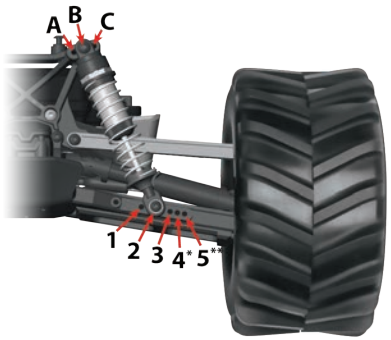

* The shock guards must be removed on the front arms to access position 4.

** The shock guards must be removed on the front or rear arms to access position 5.

The suspension of your model has been set up for off-road performance (position 1 on the front suspension arms and position 2 on the rear suspension arms). If you plan on driving on hard surfaces, the following changes should be made:

1. Move the front shocks to position 2 on the suspension arms.
2. Move the rear shocks to position 3 on the suspension arms.
3. Add additional preload spacers.
4. Position 1 is not recommended for the rear shocks.

Fine Tuning the Shocks

The four shocks on the model greatly influence its handling. Whenever you rebuild your shocks, or make any changes to the pistons, springs, or oil, always make changes to them in pairs (front or rear). Piston selection depends on the range of oil viscosities that you have available. For example, using a two-hole piston with a light-weight oil will, at one point, give you the same damping as a three-hole piston with heavier oil.

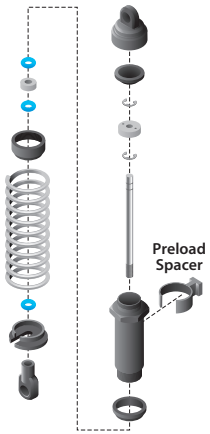

We recommend using the two-hole pistons with a range of oil viscosities from 10W to 50W (available from your hobby shop). The

thinner viscosity oils (30W or less) flow more smoothly and are more consistent, while thicker oils provide more damping. Use only 100% pure silicone shock oil to prolong seal life. From the factory, shock oil is set to 30W in the front and rear shocks.

The model's ride height can be adjusted by adding or removing the clip-on, spring preload spacers. Adjust the ride height so that the suspension arms are slightly above being parallel to the ground. Observe how the model handles in turns. Proper setup will add stability and help prevent spin outs. Experiment with different springs and shock oils to find what works best for your current track conditions.

Centering Your Servo

If the trim controls on your transmitter seem off, you may need to re-center your servo. Additionally, whenever your servo has been removed for service or cleaning, it must be re-centered prior to installation in the model.

1. Disconnect the servo horn from the steering servo.
2. Connect the steering servo to channel 1 on the receiver. Connect the electronic speed control (ESC) to channel 2.
3. Place fresh "AA" batteries in the transmitter and turn the transmitter power switch on.
4. Turn the steering trim adjustment on the transmitter to the center "0" position.
5. Elevate the rear wheels of the model. Connect a fresh 7.2V battery pack to the speed control and turn on the ESC (see page 18). The servo will automatically jump to its center position.
6. Turn off the power to the model followed by the transmitter. The servo horn is now ready to be installed.
7. Be careful not to move the servo shaft when installing the servo horn. Readjust the ESC as described in the "Adjusting the Speed Control" section.

Motors and Gearing

There are two different types of motors that can be purchased for your model, brushed and brushless. Brushed motors are the standard and offer good power inexpensively. They use metallic brushes to send electrical power to the commutator inside the motor. A brushless motor eliminates the brush-to-commutator contact points, along with its heat and wear. Because of this, brushless motors offer more speed, and are more efficient and do not require the same amount of maintenance, but are more expensive and require a special electronic speed control (ESC).

When going brushless, differential gears, parts #5379 and #6879, can be used for maximum durability.

One of the more significant advantages to your model's transmission is the extremely wide range of available gear ratios. It can be geared low enough to run extremely hot, modified motors. Modified motors should be geared lower (higher numerically) than stock motors because they reach their maximum power at higher RPM's. A modified motor that is geared incorrectly can actually be slower than a correctly-geared, stock motor. Use the following formula to calculate the overall ratio for combinations not listed on the gear chart:

$$\frac{\text{\# Spur Gear Teeth}}{\text{\# Pinion Gear Teeth}} \times 3.92 = \text{Final Gear Ratio}$$

If you are worried that you might be over-geared, check the temperature of the battery pack and motor. If the battery is extremely hot, and/or the motor is too hot to touch, your model is probably over-geared. If you are not able to run your model for at least four minutes before the battery dies, then change to a lower gear ratio. This temperature test assumes that the model is close to factory stock weight and operates freely with no excessive friction, dragging, or binding, and the battery is fully charged and in good condition.

The model is equipped with a Titan 12T motor. The gear combination that comes stock on each model provides good overall acceleration and top speed. If you want more top speed and less acceleration, install the optional high-speed gearing (more teeth; sold separately). The optional high-speed gearing is intended for high-speed running on hard surfaces, and is not recommended for off-road or repetitive starting and stopping.

The Titan 12T is equipped with an integrated cooling fan that is effective during medium to high-speed operation. The gearbox is specially vented to cool the motor. Repetitive starting and stopping over short distances creates excess heat and will not allow the fan to cool the motor properly. For this type of driving, smaller pinion gears are recommended to reduce load on the motor.

Gearing Compatibility Chart:
The chart below shows recommended gear combination ranges for your model.

Pinion Gear \ Spur Gear	50	52	54
9	21.76	22.63	23.50
10	19.58	20.37	21.15
11	17.80	18.52	19.23
12	16.32	16.97	17.63
13	15.06	15.67	16.27
14	13.99	14.55	15.11
15	13.06	13.58	14.10
16	12.24	12.73	13.22
17	11.52	11.98	12.44
18	10.88	11.31	11.75
19	10.31	10.72	11.13
20	9.79	10.18	10.58
21	9.33	9.70	10.07
22	8.90	9.26	9.61
23	8.51	8.86	9.20
24	8.16	8.49	8.81
25	7.83	8.15	8.46

- Out of Box Setup, recommended for most running, 6 or 7 cell NiMH, 2S LiPo
- 30+ mph gearing (Sold Separately), for high-speed running only
- Fits, for high-speed runs only
- Not recommended
- Does not fit

To achieve a good starting point for the slipper clutch in this model, remove the slipper gear assembly from your model (*see page 29 for instructions*) and tighten the slipper clutch adjusting nut clockwise until the slipper clutch adjusting spring fully collapses (do not over tighten), and then turn the slipper clutch nut counterclockwise one full turn.

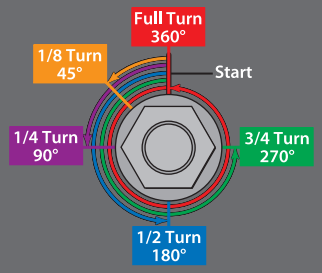

Do not run your model with the slipper clutch adjusting spring fully compressed. The minimum recommended slipper clutch setting is 1/2 turn counterclockwise from fully compressed.

Adjusting the Slipper Clutch

The model is equipped with an adjustable slipper clutch, which is built into the large spur gear. The purpose of the slipper clutch is to regulate the amount of power sent to the wheels to prevent tire spin. When it slips, the slipper clutch makes a high-pitch, whining noise. To adjust the slipper, remove the slipper gear assembly from your model (see page 29 for instructions), and turn the adjusting nut clockwise to tighten or counterclockwise to loosen. Adjust the slipper so that you can hear it slip for a moment from a standing, full throttle start. (Learn more about adjusting the slipper clutch in the sidebar.)

Wheels and Tires

Many types of aftermarket tires and wheels can be adapted for use on your model. Most will affect the overall width and the suspension geometry of the model. The offsets and dimensions designed into the model's wheels are intentional; therefore, Traxxas cannot recommend the use of other non-Traxxas wheels with different specifications. The diameter of the wheels is an innovative design, and there is a variety of different tires available for you to experiment with in addition to the included tires on the model (listed in your parts list). Experimentation with different types of tires is recommended to see which ones work the best on the terrain where the model is run. When selecting tires, consider the overall diameter and the rubber compound (hard or soft). If the overall diameter of the tire is significantly increased, you will need to use a smaller pinion gear to compensate for the larger tire. Soft compound tires with many short spikes generally work better on hard, dry surfaces. In loose dirt, a tire with large spikes should perform better. See your parts list for accessory wheels and tires.

TUNING THE SEALED GEAR DIFFERENTIALS

The action of the model's front and rear gear differentials can be tuned for different driving conditions and performance requirements without major disassembly or removal of the suspension system.

From the factory, the differentials are sealed to maintain consistent long-term performance. Changing the oil in the differential with either lower or higher viscosity oil will vary the performance characteristics of the differentials. Changing to higher viscosity oil in the differential will reduce the tendency for motor power to be transferred to the wheel with the least traction. You may notice this when making sharp turns on slick surfaces. The unloaded wheels on the inside of the turn have the least traction and tend to spin up to extremely high RPMs. Higher viscosity (thicker) oil causes the differential to act like a limited-slip differential, distributing more equal power to the left and right wheels.

Stampede 4X4 will generally benefit from higher viscosity oil when climbing or racing on low traction surfaces. **Note**: Heavier oil will allow power to be transferred even with one or more tires off the ground. This can make the vehicle more likely to overturn on high-traction surfaces.

From the factory, the front and rear differentials are filled with SAE 30,000W viscosity silicone oil.

Only use silicone oil in the differentials. Traxxas offers various viscosity oil between SAE 10,000W, and 500,000W (see your parts list). The differentials have to be removed from the vehicle and disassembled to change/replace oil. Follow the steps below to access and refill the front and rear differentials:

Front differential:

1. Remove the two 3x15mm button-head screws that secure the top bumper mount to the differential case.
2. Turn the chassis over and remove the three 4x10mm countersunk screws that hold the bumper/skid plate to the bulkhead. The two rear screws do not need to be removed.
3. Slide the bumper assembly off the chassis.
4. Remove the 3x15mm button-head screw from the differential tie bar.
5. Slide the tie bar off the truck.

6. Remove the two 3x15mm button-head screws from the differential cover. Do not remove the two screws that secure the shock tower.
7. Use a 1.5mm hex wrench to remove the two screw pins that hold the driveshaft yokes to the differential output shafts. Remove the differential cover and slide the differential out of the front of the case.
8. To reinstall the differential, reverse the steps.

Rear differential:

1. Remove the two 3x20mm button-head screws that secure the top bumper mount to the differential case.
2. Turn the chassis over and remove the two 3x12mm countersunk crews that hold the bumper/skid plate to the bulkhead. The two front screws do not need to be removed.
3. Remove the 3x20mm button-head screw from the bumper mount and tie bar.
4. Slide the bumper assembly off the chassis.
5. Remove the tie bar from the chassis.
6. Remove the two 3x15mm button-head screws from the differential cover. Do not remove the two screws that secure the shock tower.
7. Remove the differential cover and slide the differential out of the front of the case.
8. To reinstall the differential, reverse the steps.

Refilling the differential:

1. Remove the four 2.5x10mm screws from the differential case and carefully pull the differential case halves apart. Work over a towel to collect any fluid that drips from the differential.
2. Drain the fluid from the differential. You may wish to remove the spider gears from the differential to make this easier.
3. Place the spider gears back into the differential case (if you removed them). Fill the differential case with fluid until the spider gears are submerged half way.
4. Rejoin the differential case halves, using care to align the screw holes. Be sure the rubber gasket is in place or the differential may leak.
5. Install the 2.5x10mm screws and tighten securely.

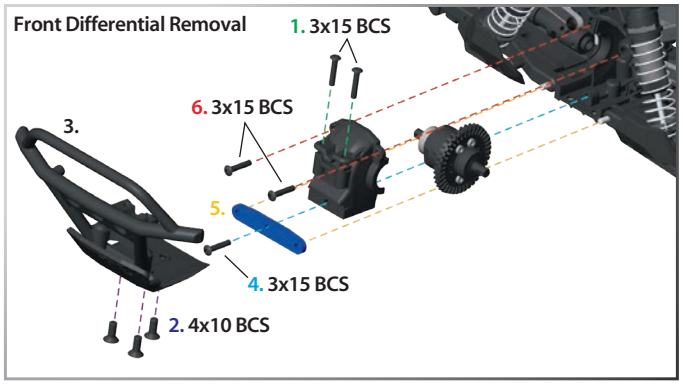

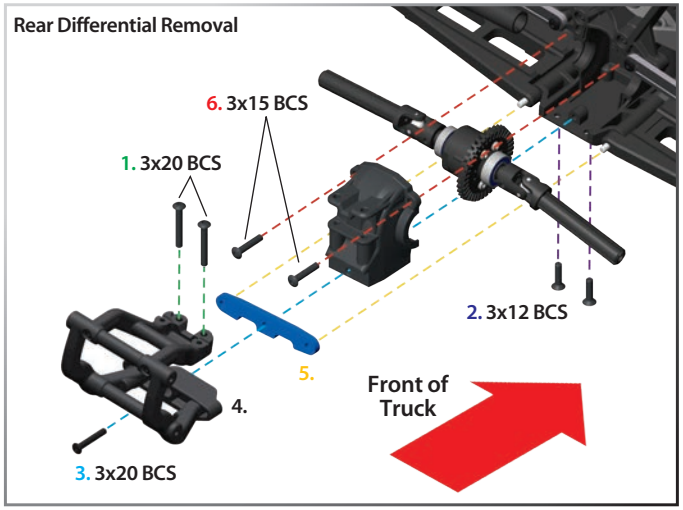

Always wear eye protection when using compressed air or spray cleaners and lubricants.

Your model requires timely maintenance in order to stay in top running condition. **The following procedures should be taken very seriously.**

Inspect the vehicle for obvious damage or wear. Look for:

1. Cracked, bent, or damaged parts
2. Check the wheels and steering for binding.
3. Check the operation of the shock absorbers.
4. Check the wiring for any frayed wires or loose connections.
5. Check the mounting of the receiver and servo(s) and speed control.
6. Check the tightness of the wheel nuts with a wrench.
7. Check the operation of the radio system, especially the condition of the batteries.
8. Check for any loose screws in the chassis structure or suspension.
9. Check the operation of the steering servo and ensure that it is not binding.
10. Inspect the gears for wear, broken teeth, or debris lodged between the teeth.
11. Check the tightness of the slipper clutch.

Other periodic maintenance:

- **Slipper clutch pads (friction material):** Under normal use, the friction material in the slipper clutch should wear very slowly. If the thickness of any one of the slipper clutch pads is 1.8mm or less, the friction disc should be replaced. Measure the pad thickness using calipers or measuring against the diameter of the 1.5 and 2.0mm hex wrenches provided with the model.
- **Chassis**: Keep the chassis clean of accumulated dirt and grime. Periodically inspect the chassis for damage.
- **Steering**: Over time, you may notice increased looseness in the steering system. There are several components that will wear out from use: the bellcrank bushings (part #2545), and the tie rod ends (part #2742). Replace these components as needed to restore factory tolerances. The bellcrank bushings may be replaced with 5x8mm ball bearings (part #2728).
- **Motor**: Every 10-15 runs, remove, clean, and lubricate the motor. Use a product such as electric motor cleaning spray to flush dirt out of the motor. After cleaning, lubricate the bushings at each end of the motor with a drop of light-weight electric motor oil.
- **Shocks**: Keep the oil level in the shocks full. Use only 100% pure silicone shock oil to prolong the life of the seals. If you are experiencing leakage around the top of the shock, inspect the bladder in the top cap for signs of damage or distortion from overtightening. If the bottom of the shock is leaking, then it is time for a rebuild. The Traxxas rebuild kit for two shocks is part #2362.
- **Suspension**: Periodically inspect the model for signs of damage such as bent or dirty suspension pins, bent turnbuckles, loose screws, and any signs of stress or bending. Replace components as needed.
- **Driveline**: Inspect the driveline for signs of wear such as worn drive yokes, dirty axle half shafts, and any unusual noise or binding. If a U-joint pops apart, then it is time to replace the part. Remove the gear cover to inspect the spur gear for wear and check the tightness of the set screws in the pinion gears. Tighten, clean, or replace components as needed.

Storage

When you are through running the model for the day, blow it off with compressed air or use a soft bristled paint brush to dust-off the vehicle.

Always disconnect and remove the battery from the model whenever the model is stored. If the model will be stored for a long time, then also remove the batteries from the transmitter.

Suspension and slipper clutch assembly removal

Your model was designed with ease of disassembly in mind. The entire front and rear suspension assemblies can be removed from the chassis fully intact with the removal of only a few screws. Refer to the exploded views included in the your model's Service Support Guide for complete assembly diagrams.

• **Removing the front suspension module**

1. Remove the two 4x12 button-head cap screws from the front of the chassis.
2. Remove the two 4x10 button-head cap screws from the top of the chassis.
3. Remove the 3x15 button-head cap screw from the steering link under the chassis.
4. Pull the front suspension assembly away from the chassis.
5. The driveshaft will come out with the front module. Remove screw pin to remove driveshaft.

• **Removing the rear suspension module** (Slipper clutch assembly removal)

1. Remove the two 4x12 button-head cap screws from the top of the chassis.
2. Remove the two 4x12 button-head cap screws from the bottom of the chassis.
3. Pull the rear suspension assembly away from the chassis.
4. The slipper clutch assembly can now be removed.

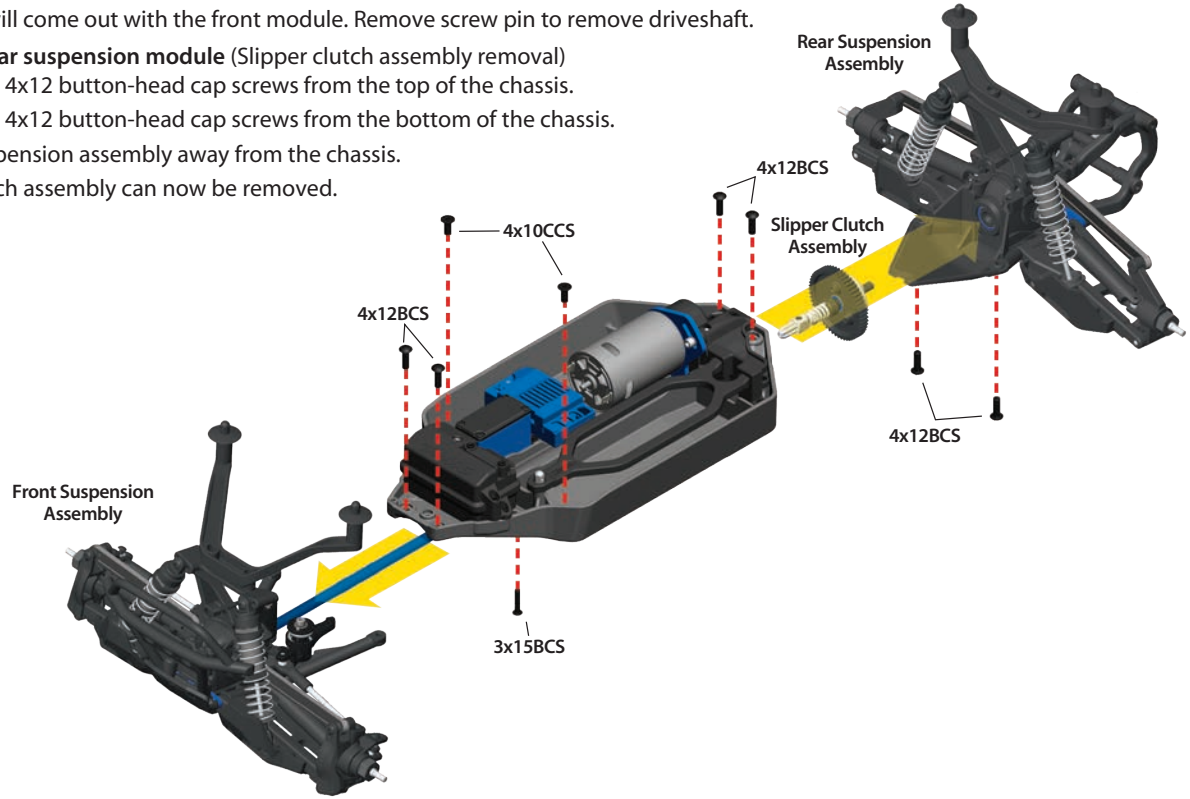

STAMPEDE® 4X4

OWNER'S MANUAL

TRAXXAS

6250 TRAXXAS WAY, MCKINNEY, TEXAS 75070
1-888-TRAXXAS

190603 67054-1-OM-N-EN-R03